UCRL-JC-124911
PREPRINT

The Effect of Amplifier Component Maintenance on Laser System Availability and Reliability for the US National Ignition Facility

A. C. Erlandson, H. Lambert, L. E. Zapata,
L. Pedrotti, D. W. Larson, M. D. Rotter,
W. J. Dallum, S. E. Seznec, G. LeTouze,
E. Grebot, O. Carbourdin,
J. C. Fornerod, and P. Bosch

This paper was prepared for submittal to the
2nd Annual International Conference on Solid-State
Lasers for Application to Inertial Confinement Fusion
Paris, France
October 22-25, 1996

December 20, 1996

Lawrence Livermore National Laboratory

This is a preprint of a paper intended for publication in a journal or proceedings. Since changes may be made before publication, this preprint is made available with the understanding that it will not be cited or reproduced without the permission of the author.

DISCLAIMER

This document was prepared as an account of work sponsored by an agency of the United States Government. Neither the United States Government nor the University of California nor any of their employees, makes any warranty, express or implied, or assumes any legal liability or responsibility for the accuracy, completeness, or usefulness of any information, apparatus, product, or process disclosed, or represents that its use would not infringe privately owned rights. Reference herein to any specific commercial product, process, or service by trade name, trademark, manufacturer, or otherwise, does not necessarily constitute or imply its endorsement, recommendation, or favoring by the United States Government or the University of California. The views and opinions of authors expressed herein do not necessarily state or reflect those of the United States Government or the University of California, and shall not be used for advertising or product endorsement purposes.

The effect of amplifier component maintenance on laser system availability and reliability for the US National Ignition Facility

A. C. Erlandson, H. Lambert, L.E. Zapata, L. Pedrotti, D. W. Larson, M. D. Rotter, and W. J. Dallum

Lawrence Livermore National Laboratory
PO Box 808, L-490
Livermore, California 94551
(telephone: 510-423-3709)

and

S. E. Seznec, G. LeTouze, E. Grebot, O. Carbourdin, J. C. Fornerod, and P. Bosch

Centre d'Etudes de Limeil-Valenton
94195 Villeneuve St. Georges Cedex
Valenton, France
(telephone: 01-45-95-64-44)

Abstract

We have analyzed the availability and reliability of the flashlamp-pumped, Nd:glass amplifiers that, as a part of a laser now being designed for future experiments, in inertial confinement fusion (ICF), will be used in the National Ignition Facility (NIF). Clearly , in order for large ICF systems such as the NIF to operate effectively as a whole, all components must meet demanding availability and reliability requirements. Accordingly, the NIF amplifiers can achieve high reliability and availability by using reliable parts, and by using a cassette-based maintenance design that allows most key amplifier parts to be replaced within a few hours. In this way, parts that degrade slowly -- as the laser slabs, silver reflectors, and blastshields can be expected to do, based on previous experience -- can be replaced either between shots or during scheduled maintenance periods, with no effect on availability or reliability. In contrast, parts that fail rapidly -- such as the flashlamps -- can and do cause unavailability or unreliability. Our analysis demonstrates that the amplifiers for the NIF will meet availability and reliability goals, respectively, of 99.8% and 99.4%, provided that the 7680 NIF flashlamps in NIF have failure rates of less than, or equal to, those experienced on Nova, a 5000-lamp laser at Lawrence Livermore National Laboratory (LLNL).

Keywords: amplifiers, availability, flashlamps, ICF, inertial confinement fusion, laser, LMJ, NIF, maintenance, reliability

1. Introduction

The NIF Project's mission is to provide an aboveground experimental facility capable of achieving fusion ignition, while performing weapons effects simulation, and furthering the development of inertial fusion energy and high energy-density physics.[1] To achieve its mission, the NIF will use a 192-beam, flashlamp pumped, neodymium glass laser capable of delivering onto target 1.8MJ, 600TW pulses at the harmonically-converted wavelength of 351 nm. While Lawrence Livermore National Laboratory (LLNL) is the

prime contractor for the NIF Project, other laboratories funded by the US Department of Energy are key contributors: Los Alamos National Laboratory, Sandia National Laboratory, and the University of Rochester.

The French Commissariat a l'Energie Atomique (CEA) is currently designing the Laser Megajoule, a 240-beam laser facility that will be similar to the NIF but will also be approximately 25% larger. Since the NIF and LMJ share a common amplifier design now being developed by a joint US-French team, the LMJ amplifiers can be expected to meet reliability and availability goals close to those of the NIF amplifiers. The analyses presented in this paper, however, apply only to the NIF.

Availability is defined here as unity minus the fraction of scheduled laser shots lost due to equipment failures and downtime for repairs. Reliability is defined here as the fraction of laser shots taken for which the laser meets its primary requirements (e.g., power, energy, and beam balance). Together, availability and reliability are used to calculate the average number of successful shots per year, i.e., the number of shots taken for which the entire system meets its primary requirements. For example, the current NIF operating plan calls for 69 out of 353 working days per year to be set aside for scheduled maintenance, leaving 284 days per year for scheduled shots. Given the specified rate of 3 shots per day, and assuming the NIF meets its 90% availability requirement, an average of 770 shots per year will be taken. Assuming the NIF meets its 80% reliability requirement, 616 of these 770 shots will be successful.

The NIF has many subsystems that must be available and must meet performance requirements in order for successful shots to occur. These subsystems include the conventional facilities, target area, controls and diagnostics, optical components, optical pulse generators, optical switches, power conditioning, and power amplifiers. On average, since the availability (or reliability) of the system is calculated by multiplying the availabilities (or reliabilities) of the subsystems together, the availability and reliability goals for the subsystems are considerably higher than the availability and reliability of the system as a whole. For example, as set forth above in the abstract, the availability and reliability goals set for the NIF amplifiers are, respectively, 99.8% and 99.4%.

This paper describes the analyses used to establish the feasibility of achieving the 99.8% availability and 99.4% reliability goals for the NIF amplifiers.

2. Amplifier design

Both the NIF and LMJ designs use flashlamp-pumped, Nd:glass, Brewster-angle slab, multisegment amplifiers with eight ~40-cm-square apertures arranged in a 4-high by 2-wide matrix, as shown in Figure 1. Similar multi-segment amplifiers with four ~40-cm-square apertures arranged in a 2x2 matrix were built and operated for the Beamlet Project. By grouping beams, costs are significantly reduced, both by reducing building size, and by reducing the number of amplifier parts. Each NIF beamline uses an 11-slab-long, four-pass amplifier and a 5-slab-long, two-pass amplifier.

Optical gain is provided by neodymium-doped, phosphate glass, rectangular laser slabs that are oriented at Brewster's angle, with respect to the beam to eliminate reflection losses. Absorbing edge claddings are bonded to the slabs to prevent internal parasitic laser oscillation. Two columns of laser slabs, separated by a central flashlamp array, provide pumping in both directions. The slabs are pumped, in addition, by side flashlamp arrays that use reflectors behind the lamps to redirect the light in one direction. Further, glass blastshields mounted between the flashlamps and the laser slabs, serve

three purposes: to protect the laser slabs from particles produced by the flashlamps; to prevent acoustic waves generated by the flashlamps from propagating into the beam path and causing wavefront distortion; and to define a channel for flowing gas over the flashlamps to accelerate the shot rate. Finally, the blastshields have anti-reflective coatings on both sides to increase pumping efficiency.

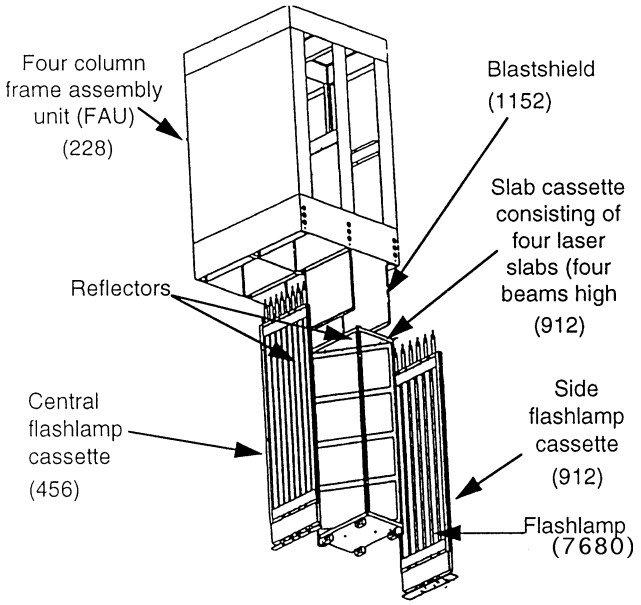

Fig. 1. Current designs for the NIF and LMJ amplifiers use amplifier modules four slabs high, two slabs wide, and two slabs deep. An assembled module is shown in the left, while major line-replacement units are shown on the right.

Figure 1 shows an assembled, 4-slab high, 2-slab wide, 2-slab-deep assembled amplifier module and the major amplifier line-replaceable. The largest line-replaceable units are the frame assembly units (FAUs), which are aluminum boxes used to support the other amplifier parts. The blastshields separating the flashlamp and slab compartments are sealed hermetically to the FAUs. Other line-replaceable units are the slab cassettes, each of which holds four-high columns of laser slabs, and the flat silver reflectors located at the top and bottom of the pump cavity; the side flashlamp cassettes, each of which holds six flashlamps; and the central flashlamp cassettes, each of which holds eight flashlamps. In addition to the flashlamps, both types of flashlamp cassettes hold the silver reflectors near the flashlamps. Utility boxes mounted above the FAUs supply cooling gas and pulsed power to the flashlamp cassettes. Altogether, the NIF amplifiers will use 228 frame assembly units, 912 slab cassettes, 912 side flashlamp cassettes, 456 central flashlamp cassettes, and 7680 flashlamps.

3. Amplifier maintenance procedures

Maintenance for the NIF and LMJ amplifiers will be performed using special maintenance carts that access the amplifiers from the bottom. The advantage of a cart-based, bottom-access maintenance design is that the amplifier line-replaceable units can be installed and removed relatively quickly without disturbing their neighbors, even with the amplifiers packed closely together, side-by-side, to reduce building space. Figure 2

shows a prototype maintenance cart inserting a slab cassette into a frame assembly unit. Such a cart will be tested at LLNL in 1997.

Two hours will be required, we estimate, to replace a slab cassette or a flashlamp cassette. Although the two types of cassettes are of different sizes and weights, steps to remove both types of cassettes will be the same: a cart from a service area is moved to the laser bay, and positioned at the amplifier FAU; to protect the slabs from particles in the laser bay, the top of the cart is sealed to the bottom of the FAU; after the dust cover at the top of the cart is pressed against the dust cover at the bottom of the FAU, both covers are removed to the side; a vertical translation stage in the cart is then raised to support the weight of the cassette; latches holding the cassette in the FAU are released by pistons on the cart translation stage; finally, the cassette is lowered into the cart, the dust covers are moved back into position and separated, the cart is unsealed from the FAU, and the cart transports the cassette to a cleanroom for repairs and refurbishment. To insert a cassette, these steps are performed in reverse order.

Twenty-four hours, we estimate, will be required to replace a frame assembly unit. One concept for handling the FAUs, using a scissor lift, is shown in Figure 3. Steps to remove an FAU from its support structure are as follows: utility boxes at the top of the FAU are disconnected and removed from the FAU; curtains are placed over the top and sides to protect the FAU from contamination in the laser bay; seals at the end of the FAU are broken and its neighbors moved apart; end covers are placed over the open ends of the FAU and its neighbors; a translation stage on the lift is raised to support the weight of the FAU; the FAU is unbolted from its support plate; and the cart lowers the FAU and transports it to a cleanroom for refurbishment.

Since, in the current NIF amplifier design, it will be necessary to replace an entire FAU in order to replace a blastshield, we also estimate that 24 hours will be required to replace a blastshield.

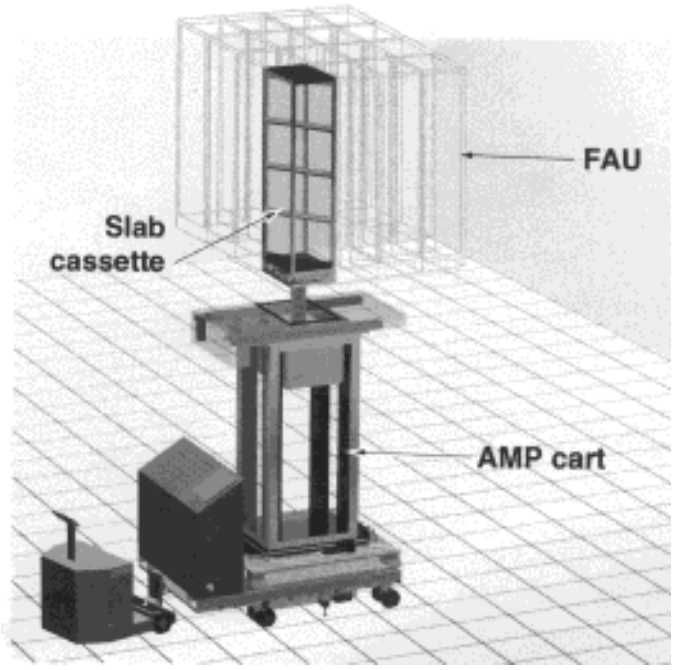

Fig. 2. Specialized maintenance carts will be used to install and remove slab cassettes and flashlamps cassettes from the amplifier frame assembly units.

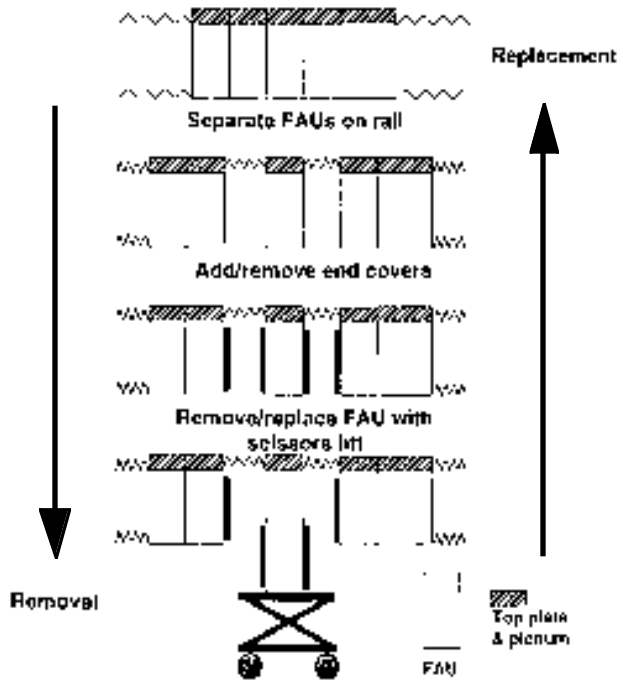

Fig. 3. Large scissor lifts could be used to install and remove frame assembly units.

4. Amplifier component failures

We have examined maintenance records from Nova, a 10-beam, 45kJ laser at LLNL that has been operating since 1984. Nova uses 31.5-cm and 46-cm amplifiers that contain 180 laser slabs, 180 blastshields, 5000 flashlamps, and several hundred reflectors. During its ~12 years of operation, Nova has accumulated some 9000 shots, approximately 40% of the 30-year, 23,000-shot lifetime anticipated for the NIF. Although there are differences between the NIF and Nova amplifier components, most of the NIF components will be constructed of the same or similar materials as those of the Nova components. Further, as both the NIF and Nova amplifiers use Xe-filled flashlamps fired at 20% of their single-shot explosion energy, the NIF amplifier components will be exposed to approximately the same flashlamp fluences as the Nova amplifier components. Further, the laser slabs will be exposed to only slightly higher laser fluences. For these reasons, we believe that the Nova amplifier component failure rates are useful for estimating reasonable component failure rates for the NIF amplifiers

4.1 Laser slabs

Over the past six years, the laser slabs on Nova have been replaced at an average rate of ~5% per year. Nearly all laser slabs were replaced due to the growth of one or more optical damage sites, which were detected from inspections of the near-field intensity distributions measured on the laser beams. If allowed to grow unchecked, these optical damage sites could eventually cause diffractive intensity variations of sufficient amplitude to damage downstream optics.[2] Since the optical damage sites have grown slowly, however, it has been possible to replace damaged laser slabs during scheduled

maintenance periods before damage to downstream optics has occurred. Thus, laser slab failures have had no impact on the availability or reliability of Nova.

Although higher laser fluences are likely to cause optical damage sites to grow more rapidly on NIF than on Nova, nonetheless it appears unlikely that laser slab failures will affect either the availability or reliability of NIF. This result will likely obtain because it will be possible to replace damaged laser slabs, between shots, in two hours.

4.2 Silver reflectors

The stainless steel reflectors in the Nova amplifiers are silver-plated. To reduce tarnishing of the silver, the Nova amplifiers are filled with dry nitrogen. The success of this method of protecting the silver reflectors is demonstrated by the fact that the reflectivity of the silver on Nova's amplifiers has fallen on average by only a few percent after many years of operation; refurbishment of these silver reflectors has been incidental to other amplifier maintenance work; and reflector failures have had no impact on the availability or reliability of Nova.

Similarly, it appears likely that reflector failures should have little or no impact on the availability or reliability of NIF. Although the NIF flashlamps will be air cooled to accelerate laser shot-rate, the silver reflectors in the flashlamp cassettes will be protected from tarnishing by protective overcoats. In addition, as above noted, the reflectors in either the slab cassettes or the flashlamp cassettes can be replaced, between shots, in about two hours.

4.3 Blastshields

Excepting those blastshields that were damaged by flashlamp explosions, only two other blastshields were replaced during Nova's ~12 years of operation, These latter two blastshields were replaced due to spalling, the pitting that occurs when flashlamp light evaporates inclusions in the blastshield glass. Although the particles shed by spalling have not caused detectable damage to the reflectors or laser slabs, nevertheless spalling does decrease gain by creating pits that scatter flashlamp pump light. Yet, nearly all blastshields on Nova have experienced some spalling, and the spalling generally has not been sufficiently extensive as to require blastshield replacement. Consequently, in the case of Nova, blastshield replacement has been incidental to other amplifier maintenance work, and blastshield failures have had no impact on the availability or reliability of Nova.

Similarly, assuming that current development efforts directed at developing spall-resistant blastshields with durable anti-reflective coatings are successful, blastshield failures will have no impact on the availability or reliability of NIF.

4.4 Flashlamps

Figure 4 shows a diagrammatic sketch of a Nova flashlamp.[3] The Nova flashlamps have 2.5-mm-thick, Ce-doped quartz envelopes to prevent ultraviolet radiation from escaping and damaging the amplifier components, and electrically-insulating bases for mounting the flashlamps at the ends. To reduce sputtering, the cathodes are made of sintered tungsten doped with low work-function materials that make the current at the cathode more uniform and reduce operating temperatures. Doped cathodes are necessary since material that is sputtered onto the inside surface of the lamp envelope scatters or

absorbs flashlamp radiation, reduces flashlamp output, and causes additional thermal stress in the lamp envelope. The flashlamps use either glass-to-metal seals, in which the feedthrough conductors at the ends of the flashlamp are tungsten rods, or solder seals, in which the conductor is a metal cap soldered over the end of the envelope. The Nova flashlamps are filled with 300 Torr of Xe and have either a 1.5-cm bore diameter and a 112-cm arc length, or a 2-cm bore diameter and a 48-cm arc length. The Nova flashlamps are currently operated at flashlamp energies corresponding to 20% of their single-shot explosion energies (in the open), although some flashlamps were operated reliably, during the first two years of operation, at 25%.

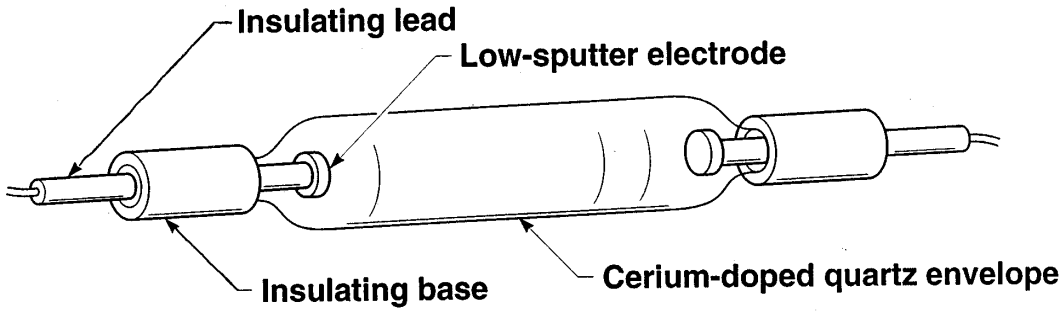

Fig. 4. The NIF and Nova flashlamps use cerium-doped quartz envelopes, low-sputter electrodes, and electrically-insulated bases and leads.

Although the Nova flashlamps have, in general, operated reliably, flashlamp failures of the following three different types have occurred: trigger failures, electrical insulation failures in the bases and leads, and explosions. Trigger failures are caused by failure of the seals at the end of the flashlamp that allow air or nitrogen to enter the flashlamp, or by buildup of electronegative contaminants in the Xe gas fill. Flashlamp failures are detected by measuring electrical currents either during main system shots or during low-energy test shots taken after the main system shots. Since flashlamp circuits with anomalous currents are turned off until the flashlamps are repaired, all three types of flashlamp failures cause reduced gain, uneven pumping of the laser slabs, and beam-to-beam variations in gain until the failed flashlamps are replaced. The 12-year average failure rates for the Nova flashlamps are 1.5 per million lamp shots for trigger failures; 0.5 per million lamp shots for electrical insulation failures; and 0.043 per million lamp shots for explosions. These rates do not include flashlamp explosions that were caused by a pulsed power problem nor trigger failures for a particular flashlamp design that had a defective seal.

The NIF flashlamps will be much larger than the Nova flashlamps, with a 4.3-cm bore diameter and a 180-cm arc length. However, the general features and materials used in the NIF flashlamps will be the same as those in the Nova flashlamps, and the NIF flashlamps will also be fired at 20% of their single-shot explosion energies. The NIF flashlamps will be preionized to increase pumping efficiency and to extend flashlamp life by causing more uniform arc development, and will have larger diameter bases with more electrical insulation, presumably reducing the risk of electrical insulation failures. Since the peak electrical currents of the NIF flashlamps will be much higher than for the Nova flashlamps -- 25 kA compared with 6 kA for the largest Nova lamps -- the magnetic forces acting on the envelopes, electrodes, feedthroughs, and leads will be larger than for the Nova flashlamps. Thus, a major difference between the NIF flashlamps and the Nova flashlamps will be stronger seals and improved strain relief on

the leads. Preliminary tests performed recently on several prototype NIF flashlamps demonstrated reliable operation for more than 20,000 shots, and one flashlamps was operated for more than 39,000 shots.

Ray-trace calculations were performed to estimate the effect on NIF amplifier performance of a flashlamp failure in a side flashlamp array. Taken into account in these calculations was the fact that a single trigger failure or electrical insulation failure will cause not one but two flashlamps to fail to fire, since flashlamps are connected together in a series of two; and the further fact that pulse energy is shared between twenty flashlamp pairs that are connected together in parallel. Because of the parallel flashlamps, a flashlamp trigger failure causes the energy normally delivered to the flashlamp pair to instead be delivered to the neighboring 38 flashlamps, causing their energy to increase by ~5%. Electrical insulation failures, however, cause the energy delivered to the neighboring 38 flashlamps to decrease by ~15%. Electrical modeling shows that arcs draw approximately four times the normal energy delivered to the flashlamp.

The ray trace calculations show that when a trigger failure occurs in the side array of a NIF amplifier, the small-signal gain in the four apertures pumped by the affected side array drops by ~7%, while the small-signal gain in the adjacent four apertures in the beam bundle increases by ~5%, due to the lamp energy sharing. When electrical insulation failures occur, the small-signal gain in the four apertures pumped by the affected side array decreases by ~30%, while the small-signal gain in the adjacent four apertures in the beam bundle decreases by ~15%. We assume that flashlamp explosions could have the same effect as electrical insulation failures, since failure of the envelope during and explosion is likely to allow an arc to develop between the electrodes and the reflectors.

The most significant effect of the flashlamp failures on performance will be on shot-to-shot variations in small-signal gain, which affect beam-to-beam power balance. In order for the system to meet its beam power balance requirement of less than +-8% rms variations beam-to-beam, and also taking into account other sources of beam-to-beam power imbalance, the amplifiers will need to produce less than +-3% rms variations in small-signal gain shot-to-shot, averaged over the 192 beams. Using this criterion, and the results of the ray-trace calculations above, we have concluded that flashlamps contribute to unreliability only under the following three conditions:

- two or more flashlamps fail to trigger;
- one or more flashlamps experience insulation failures; or
- one or more flashlamps explode.

5. NIF flashlamp failure-rate requirements

Using the results above, we find that the NIF amplifiers would meet or exceed their availability and reliability requirements of 99.8% and 99.4%, respectively, provided the NIF flashlamps have the same failure rates as the Nova flashlamps. Specifically, we estimate that the NIF amplifiers will attain an availability of 99.9% and experience an average 0.25 flashlamp explosions and 6 hours of system downtime for repairs per year, provided the following assumptions hold: that NIF flashlamps will have an explosion rate of 0.043 per million lamps shots, the same as for Nova; that each flashlamp explosion will produce sufficient damage that a blastshield must be replaced; that the time required for each blastshield to be replaced will be 24 hours, as described above; and that replacing blastshields (and FAUs) after flashlamp explosions will be the only amplifier maintenance activity contributing to system downtime. The blastshields

are the only critical amplifier components expected to degrade rapidly (in the event of flashlamp explosions) for which the replacement time exceeds the 8 hours between shots.

In addition, we estimate that the NIF amplifiers will attain a reliability of 99.4%, with the amplifiers failing to meet their ±3% shot-to-shot gain stability requirement an average of 3.30 shots per year (out of 770 shots taken), provided that the NIF flashlamps have the same rates for trigger failures, electrical insulation failures, and explosions as the Nova flashlamps, and that only flashlamp failures cause amplifier unreliability, as described above. In this case, the NIF would experience on average 0.05 shots per year in which two or more flashlamps fail to trigger on the same shot; 3.0 shots per year in which one or more flashlamps have electrical insulation failures; and 0.25 shots per year in which a flashlamp explodes.

Although it is desirable for the NIF failure rates to be as low as possible, flashlamp failure rates that are greater than those experienced on Nova could be tolerated with the NIF amplifiers still meeting their 99.8% availability and 99.4% reliability goals. Specifically, the NIF amplifiers would just meet their 99.8% availability goal if the NIF flashlamps explode at a rate of 0.086 per million lamp-shots, twice the Nova rate. Further, the NIF amplifiers would also just meet their 99.4% reliability goal if the NIF flashlamps had a trigger failure rate of 7.5 per million lamp-shots (five times the Nova rate), an electrical insulation failure rate of 0.5 per million lamp-shots (equal to the Nova rate), and an explosion rate of 0.86 per million lamp-shots (two times the Nova rate). Therefore, we have set preliminary failure rates for the NIF flashlamps as follows:

- 7.5 per million lamp shots for trigger failures;
- 0.5 per million lamp shots for electrical insulation failures; and
- 0.086 per million lamp-shots for flashlamp explosions.

6. Qualification tests for NIF flashlamps

A qualification lifetime test must be passed in order for flashlamp designs to become eligible for use in the NIF amplifiers. As employed here, the word “design” is used in its broadest sense, and includes all materials, procedures, tests, and documentation used in the manufacture of the flashlamps. The purpose of the qualification test is to reduce to a minimum the risk that flashlamps with faulty designs might be used in the NIF. In the current design for the qualification test, 200 flashlamps will be fired for 10,000 shots under conditions close to those expected to exist in the NIF amplifiers. To pass the test, the 200 flashlamps must experience 10 or fewer trigger failures, zero electrical insulation failures, and zero explosions. In addition, all but 10 of the 200 flashlamps must meet minimum envelope transmission tests.

For flashlamp designs that pass the qualification test, confidence levels that the flashlamps will meet failure-rate requirements listed above for trigger failures, electrical insulation failures, and explosions are, respectively, 89%, 63%, and 16%. Although higher confidence levels are desirable for the electrical insulation failures and explosions, higher confidence levels can be obtained only at considerable additional expense, by testing more than 200 flashlamps in the qualification tests. Therefore, it will be necessary to rely on quality controls at manufacturers to ensure that the NIF flashlamps meet failure rate requirements for electrical insulation failures and explosions. The risks associated with adopting this approach seem acceptable since attaining the required failure rates has previously been demonstrated on the Nova flashlamps. In addition, risks are reduced since the qualification tests provide high

confidence levels that the flashlamp failure-rate requirements will not be exceeded by wide margins. For example, the 200-lamp test will give an 87% confidence level that the rate for electrical insulation failures will be less than 3 times the requirement, and a 65% confidence level that the rate for explosions will be less than 6 times the requirement. The method used to calculate the confidence levels is described in Ref. 4.

7. Conclusions

Development and testing will be required to ensure that the components of the NIF amplifiers meet failure-rate requirements. This development is needed because of differences between the components that will be used on the NIF and the components that have been used in previous ICF laser systems, such as the Nova laser. Provided the NIF flashlamps have failure rates that are equal to or lower than those achieved on Nova, our analysis shows that the NIF amplifiers will meet their availability and reliability goals of 99.8% and 99.4%, respectively.

8. References

1. W.J. Hogan, L.J. Atherton, and J.A. Paisner, “National Ignition Facility Design Focuses on Optics,” *Laser Focus World*, pp. 107-114, November, 1996.

2. A.C. Erlandson, M. D. Rotter, D. N. Frank, and R. W. McCracken, “Design and Performance of the Beamlet Amplifiers,” *ICF Quarterly Report* 5(1), pp 18-28, Lawrence Livermore National Laboratory, Livermore, CA, UCRL-LR-105821-95-1.

3. A.C. Erlandson and H. T. Powell, “Ten thousand flashlamps will drive most-powerful laser,” *Laser Focus World* , pp. 95-100, August, 1991.

4. E.S. Pearson and H. O. Hartley, *Biometrika Tables for Statisticians*, Vol. I, Cambridge University Press, Cambridge, 1966.

Work performed under the auspices of the U.S. Department of Energy by Lawrence Livermore National Laboratory under contract No. W-7405-ENG-48