UCID- 20890

# NC SHOP AIR TEMPERATURE CONTROL SYSTEM

HANS J. HANSEN
EDNA CARPENTER

CIRCULATION COPY
SUBJECT TO RECALL
IN TWO WEEKS

JANUARY 27, 1986

Lawrence Livermore National Laboratory

This is an informal report intended primarily for internal or limited external distribution. The opinions and conclusions stated are those of the author and may or may not be those of the Laboratory.
Work performed under the auspices of the U.S. Department of Energy by the Lawrence Livermore National Laboratory under Contract W-7405-Eng-48.

**DISCLAIMER**

**This document was prepared as an account of work sponsored by an agency of the United States Government. Neither the United States Government nor the University of California nor any of their employees, makes any warranty, express or implied, or assumes any legal liability or responsibility for the accuracy, completeness, or usefulness of any information, apparatus, product, or process disclosed, or represents that its use would not infringe privately owned rights. Reference herein to any specific commercial products, process, or service by trade name, trademark, manufacturer, or otherwise, does not necessarily constitute or imply its endorsement, recommendation, or favoring by the United States Government or the University of California. The views and opinions of authors expressed herein do not necessarily state or reflect those of the United States Government or the University of California, and shall not be used for advertising or product endorsement purposes.**

Printed in the United States of America
Available from
National Technical Information Service
U.S. Department of Commerce
5285 Port Royal Road
Springfield, VA 22161

| Price Code | Page Range |
|---|---|
| A01 | Microfiche |
| **Papercopy Prices** | |
| A02 | 001 - 050 |
| A03 | 051 - 100 |
| A04 | 101 - 200 |
| A05 | 201 - 300 |
| A06 | 301 - 400 |
| A07 | 401 - 500 |
| A08 | 501 - 600 |
| A09 | 601 |

# Service Manual
# for the
# Computer Based Temperature Control System
# For the NC Shop

Prepared By : Hans Hansen
Mechanical Engineer
Machine Tool Development Group

Edna Carpenter
Programmer
Applied Systems Development Group

Date : 13 January 1986

Last Revised : 27 January 1986

Table of Contents


| Section | Page |
|---|---|
| Introduction | 1 |
| System Function | 1 |
| Control Strategy | 1 |
| Implementation of Control Strategy | 4 |
| Detailed Description of Component Operation | 7 |
| A. Computer | 9 |
| B. Control Software | 11 |
| C. Disk Drive | 16 |
| D. Plotter | 16 |
| E. Data Acquisition and Control Unit | 16 |
| F. I/O Chassis for NC Shop Temperature Control | 17 |
| G. Temperature Sensors | 19 |
| H. Current to Pressure Transducer | 19 |
| I. ACU/Cooling Coil/Cooling Coil Valve | 19 |
| J. Makeup Air Temperature Control System | 21 |
| Appendix | 23 |

## Introduction

This manual is intended to serve as a guide to the persons responsible for the maintenance of the computer-based temperature control system in the NC shop. It provides a description of the functions of the system, its components and gives general methods for troubleshooting common problems which sometimes arise during the operation of the system. The manual covers both electronic/software topics as well as HVAC/mechanical topics, since the system uses components from both domains.

## System Function

The system has two primary functions. The main function of the system is to control the temperature of the NC shop at a point to a desired setpoint to +/- 0.5$^{o}$ F. One may choose one of eight different points geographically located within the room which is to be held at the desired setpoint, or one may choose to take the average of up to all eight of the different points to be held at the desired setpoint. The other function of the system is to monitor and record the temperature of the room at any or all of the eight points in the room plus the temperature of the air as it enters the room from the air handling unit (AHU).

## Control Strategy

As indicated earlier, the system can gather temperature information from as many as eight different points in the room or as few as one. If more than one point is chosen, one average temperature is sent to the controller for comparison with the desired setpoint. The reason for allowing a choice of the number of points is that it would be almost impossible to control all points in the shop to as tight of a temperature tolerance as would be possible if only one point were used. Therefore, if tight temperature control is really required in a certain area of the shop, the temperature sensor for that area would be selected to indicate the temperature used in the temperature controller. This would be done at the expense of losing some quality in the temperature control at points in the room further away from the sensor. On the other hand, if fairly good control were required throughout the shop, the average of all the sensors would be used.

No matter how many points are used, only one temperature signal is sent to the controller. The temperature is compared with the setpoint temperature and an error signal is generated. The error signal is then used to change the amount of cooling supplied to the room to drive the room temperature to the setpoint temperature. In most temperature control systems, the error signal is used directly to change the position of a cooling water

valve located on a cooling coil on the AHU (i.e. if the room is too hot, the cooling valve opens providing more cold water and vice-versa).

This system operates a little differently than most systems. Instead of controlling the temperature in the room by varying the position of a cooling valve, this system controls the temperature in the room by varying the temperature of the air supplied to the room by the cooling coil/AHU. There is actually a sensor and a controller just to control the temperature of the air right as it leaves the cooling coil. The setpoint of this controller is varied by the controller which is controlling the temperature in the room. When the temperature in the room is too high, the controller for the room decreases the setpoint of the supply-air temperature controller and increases it when the temperature in the room is too low. A block diagram of the system is shown in Figure 1. Although the scheme sounds unnecessarily complicated, it is the "controller driving a controller" strategy which provides the quality of temperature control the system is capable of.

Another feature of the system which helps in obtaining good temperature control is the makeup air temperature control system. The NC shop has a high velocity air system which can draw air out of the room at up to 7000 CFM. Due to conservation of mass this air must be replenished with an equal amount from outside the building. On very hot days the air entering the room can be up to 105$^{o}$ F., and on very cold days the air can be as cold as 32$^{o}$ F. If this air were to be allowed into the room without any conditioning, it would provide a very unfavorable disturbance to the system. Consequently, there are both a heating and a cooling coil located in the makeup air duct supplying the NC shop. The two coils are controlled by the same proportional pneumatic controller located on the AHU. This system operates independently of the computer-based system (i.e. the computer-based system does not control the temperature of the makeup air), but if the makeup-air control system fails, the computer-based system will not perform as well.

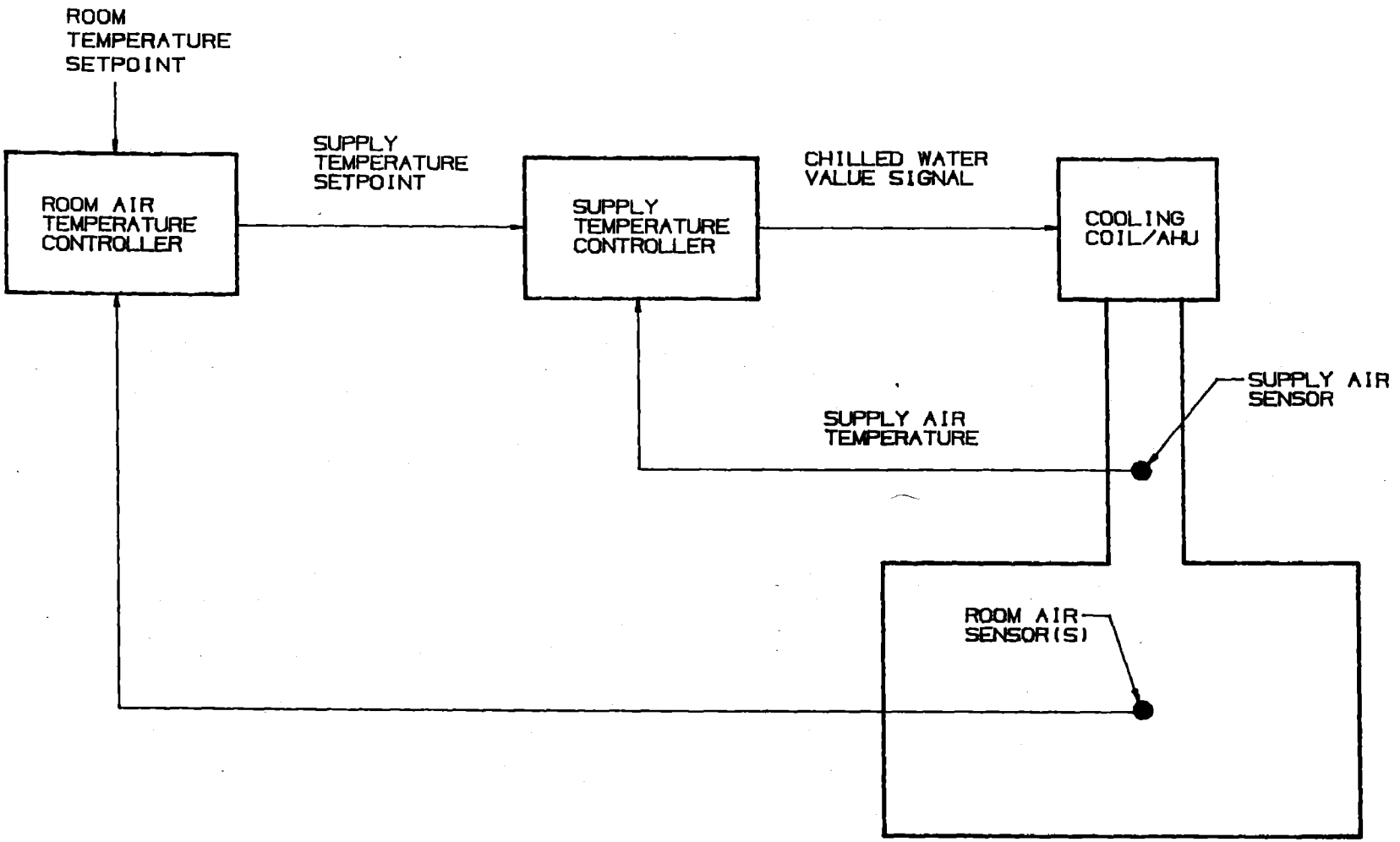


Figure 1. Temperature Control System Block Diagram

Implementation of the Control Strategy

This section describes how the different components of the system are used to provide the control strategy described. It also describes where all of the components are physically located. A schematic of the whole control system is given in Figure 2.

To begin, there are eight temperature sensors located throughout the NC shop. All of them are located in Room 1351 and all are located approximately 5 feet above the ground. At each location there is a small gray junction box mounted on the wall with a female phono plug on the front. In addition to the eight boxes located inside the shop, there is a ninth box located on the AHU on the roof. The latter box is for the sensor used to sense the temperature of the air as it leaves the AHU. The box is mounted on the bottom of the duct leaving the unit.

Into each of these boxes is plugged a thermistor temperature sensor which has about a 4 foot long cord. Each sensor has two wires, but four wires are returned to the control system so that the resistance of the wires may be compensated for. All of the boxes are linked by a conduit which terminates in a large junction box in the NC Shop supervisor's offices. The junction box is located on the south wall, west of the door at a height of about 5 feet.

From the junction box, all of the wires from the temperature sensor wires (4 wires per sensor X 9 sensors for a total of 36 wires) travel to the back of a chassis marked "I/O Chassis for NC Shop Temp. Control", later to be referred to as the Controller Chassis. The chassis is located on a shelf below the computer in the supervisor's offices. Inside the chassis, the 36 sensor wires are re-routed back out through two large cables which are terminated outside the chassis with two edge connectors.

The two cables from the Controller Chassis are plugged into the back of a Hewlett Packard 3421A Data Acquisition and Control Unit, later referred to as the scanner. The scanner is located on the shelf below the computer. The scanner is used in this application as a multi-input resistance meter and in this mode, sequentially measures the resistance of all nine of the temperature sensors, converts the resistance from analog to digital and sends the resistance values to the control computer, all under the direction of the computer. Connection is made between the scanner and the computer via a Hewlett Packard Interface Bus (HPIB) cable which is plugged into the backs of both the computer and the scanner. In controlling the temperature of the room, the

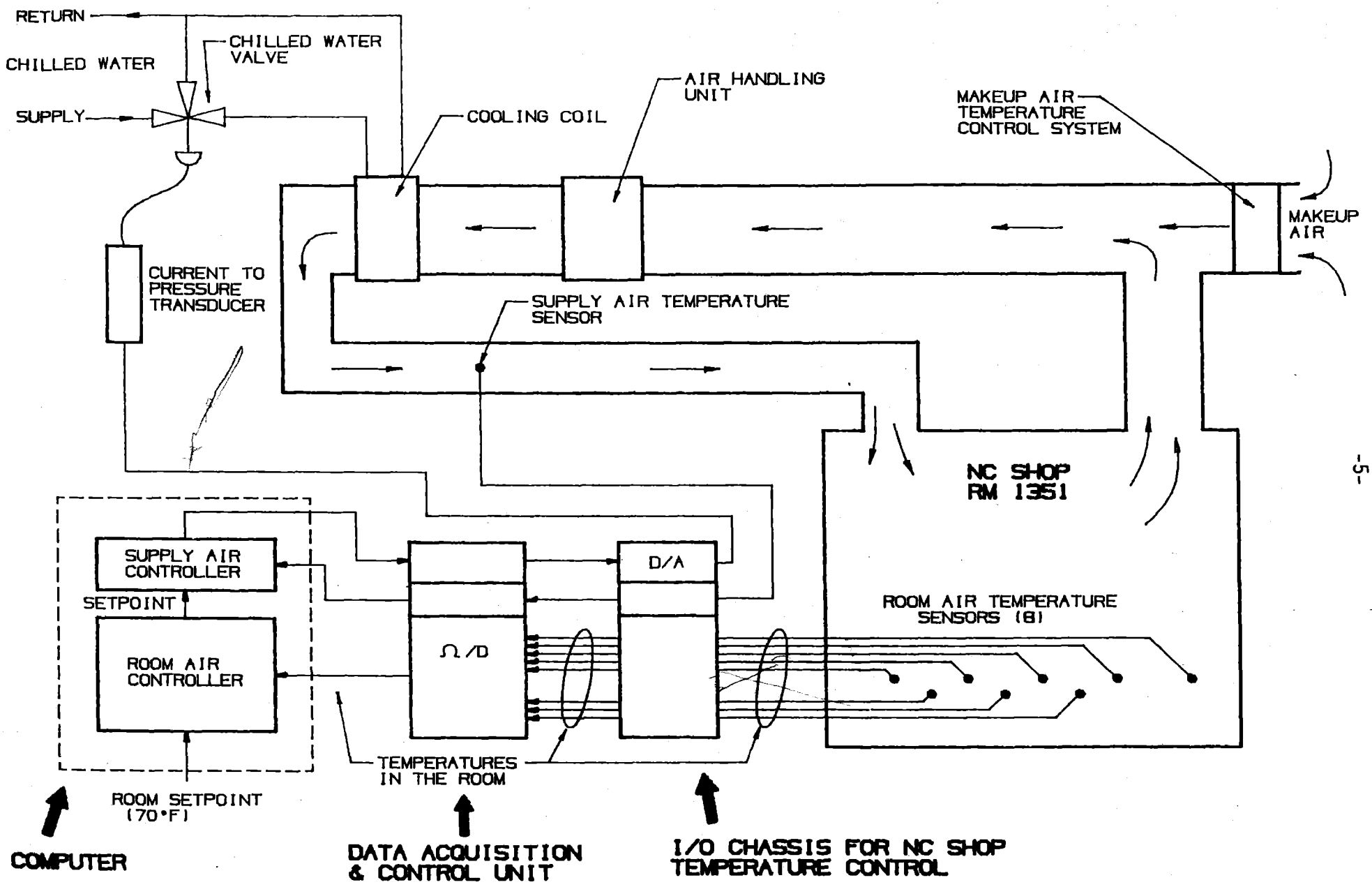


Figure 2. Temperature Control System Schematic Diagram

computer accepts the 9 resistance values from the scanner and first computes the temperatures which correspond to the resistances of each of the sensors. Next it performs some control calculations which will be described in a later section (Control Software). The final result of the control calculations is a single number called the "Valve Number".

The Valve Number is a number ranging from 1 to 255 which ultimately establishes how much cooling is provided by the cooling coil located on the roof. The amount of cooling is established as follows:

1. The valve number is sent out of the computer to the scanner via the HPIB and then from the scanner to the Controller Chassis.

2. Inside the Controller Chassis is an 8 bit digital to analog (D/A) converter which operates in a current mode. The converter and associated circuitry is configured in such a way that a valve number of 1 produces 4 mA of current and a valve number of 255 produces 20 mA.

3. The output of the D/A converter is connected to a current to pressure converter which is located in an enclosure mounted on the AHU up on the roof. The transducer produces an output pressure of about 3 psi for an input current of 4 mA and an output pressure of about 15 psi for an input current of 20 mA.

4. The air pressure signal from the current to pressure transducer controls the position of a 3-way valve on the main cooling coil on the ACU. When 3 psi is applied to the valve, no chilled water is supplied to the cooling coil. When 15 psi is applied, the maximum flow is supplied to the coil and when the pressure is between 3 and 15 psi, a flow somewhere in between zero and maximum is allowed to flow.

## Detailed Description of Component Operation

The purpose of this section of the manual is to give detailed descriptions and service information applicable to this specific application for each of the major components of the system. It also provides part numbers for use in obtaining replacement parts. The following subsystems are described:

1. Computer
2. Control Software
3. Disk Drive
4. Plotter
5. Data Acquisition and Control Unit
6. I/O Chassis for NC Shop Temperature Control
7. Temperature Sensors
8. Current to Pressure Transducer
9. ACU/Cooling Coil/Cooling Coil Valve
10. Makeup Air Temperature Control System

Accompanying figures used to show the configuration of the computer console is given in Figure 3. A cabling diagram of the computer and peripherals is given in Figure 7. There are also some engineering drawings of some of the electronics components in the Appendix.

Computer

The computer used is a Hewlett Packard 9826 minicomputer. It is located on a computer table on the south wall inside the NC Shop supervisor's offices. Figure 3 shows the computer console as installed in the offices. It has a single disk drive and a small integral monochrome display. The on/off switch for the computer is located on the front of the keyboard on the right-hand side. Manuals for the computer, supplied by Hewlett Packard are available from the Computations group supporting MFD.

The BASIC language must be resident in the computer in order for the temperature control software to work. RAM BASIC is used in this application, in conjunction with the BASIC Language Extensions 2.1. To load RAM BASIC, turn the computer off. Insert the disk marked "Basic 2.0" into the disk drive on the computer. Turn the computer back on. After about 15 seconds, the message "Basic Ready" will appear on the screen. At this point, the RAM BASIC has been loaded successfully, without the language extensions. To load the Language Extensions, remove the "Basic 2.0" disk and insert the disk marked "AP2_1, Language Extensions" into the disk drive on the computer. Then load the extensions by typing:

"LOAD BIN AP2_1"

followed by pressing the EXECUTE key.

After about 20 seconds, the extensions will be loaded and the computer will be ready to accept the temperature control software.

The temperature control software is loaded by inserting the disk marked "TEMPCON" into the disk drive on the computer and typing:

"LOAD TEMPCON"

followed by pressing the EXECUTE key.

After about 10 seconds, the control program will have completely loaded and can be run. To run the control software at this point, press the RUN key. The program will automatically initialize and start controlling the temperature of the room, although it will take about 15 to 30 minutes for the room temperature to "settle out" after a restart. The only maintenance the computer requires is that the disk drive should be cleaned once a year. This should be done in accordance to the directions provided by HP or the manufacturers of the disk drive cleaning kit, available from stores.

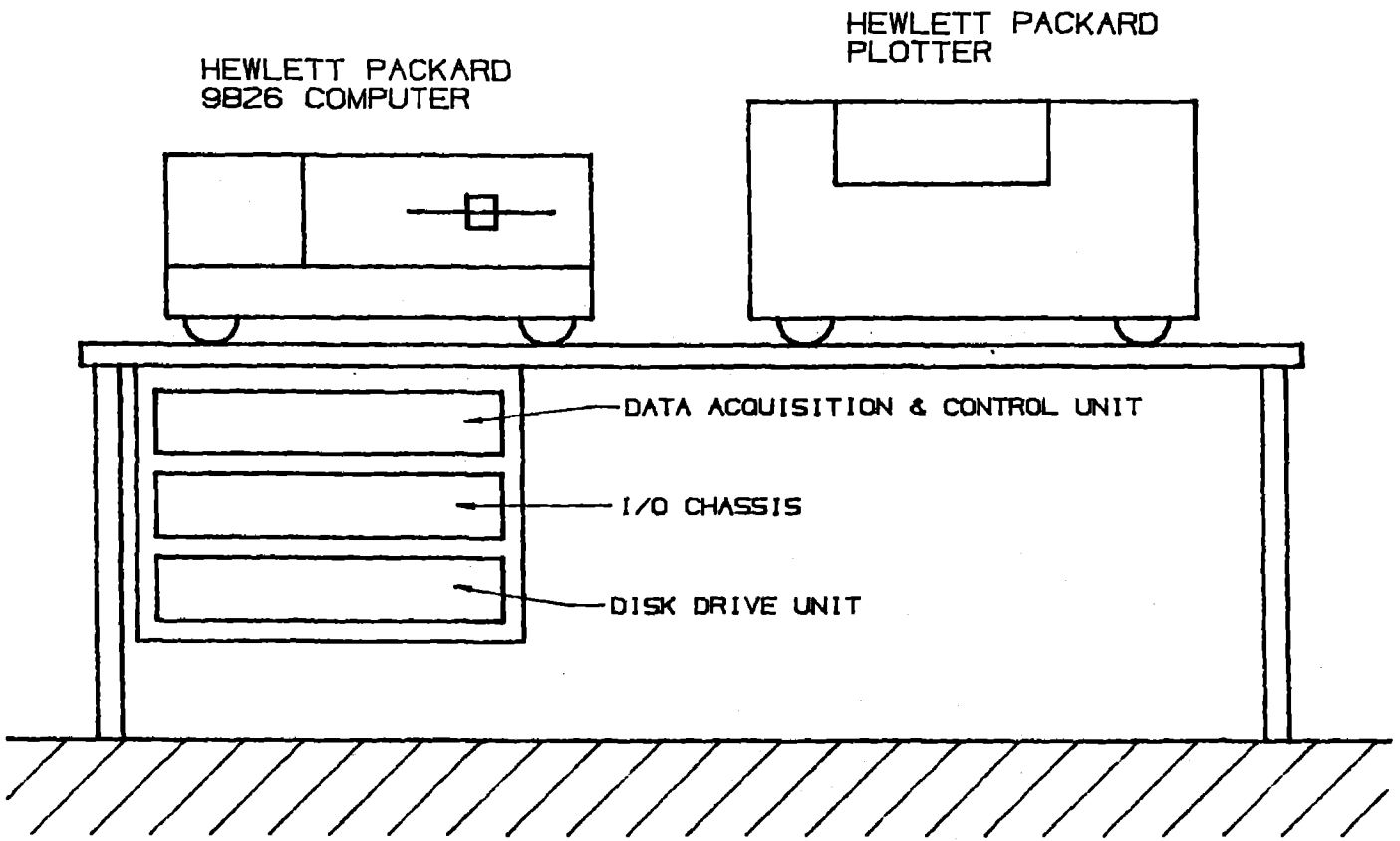


Figure 3. Temperature Controller Computer Console

Control Software

The applications program which performs the temperature control and monitors the temperatures at the nine locations within the system is called "TEMPCON". This program was written in HP RAM BASIC 2.1 by Edna Carpenter . This section of the documentation is intended to provide information about the use of the program and some description of how the program works.

When the program is run a menu is displayed on the screen with the heading "TUNING ADJUSTMENTS". While this screen is displayed, the user has the option of changing some of the parameters regarding the controller tuning, temperature data acquisition and display methods and the current date and time. If the computer detects no activity at the keyboard after waiting about 15 seconds, it will automatically proceed to start controlling the temperature of the room.

A sample "TUNING ADJUSTMENTS" screen is shown in Figure 4. In order to select which parameter one wishes to change, one must move the arrow in front of the parameter by turning the thumbwheel on the upper left corner of the computer keyboard. Once the arrow is in front of the desired parameter, the selection is made by pressing the "SELECT" key which is also located at the top of the keyboard. After the key is pressed, the computer will ask for the new value of the parameter. The new value must then be typed in followed by pressing the ENTER key. A list of what each of the parameters means is given in Figure 5 . In general the values shown in Figure 4. are acceptable for normal operation. Once all the parameter changes have been made, the controlling of the room temperature can be initiated by pressing either the START key or the ENTER key.

Once the temperature controlling of the room is initiated, the computer will fill the display with a graph and the plotter will activate for about 30 seconds while it plots the form for recording temperature. After the plotter is finished, a screen with the heading "TEMPERATURE CONTROLLER" will appear on the display and an audible "clicking" sound will be heard coming from the DACU. This sound is normal and is caused by the unit scanning the various temperature sensors. It will repeat at the sample rate selected on the "TUNING ADJUSTMENTS" screen, normally about once per second. A typical "TEMPERATURE CONTROLLER" menu is shown in Figure 6.

TUNING ADJUSTMENTS

DATA WILL BE PLOTTED ON PLOTTER

| | |
|---|---|
| PROPORTIONAL GAIN | =2.5 |
| INTEGRAL GAIN #1 | =.01 |
| PROPORTIONAL ACTION #2 | =-1 |
| INTEGRAL ACTION #2 | =0 |
| VALVE GAIN | =1 |
| SAMPLING INTERVAL | =1 SEC |
| PLOT INTERVAL ON CRT | =60 SEC |
| PLOT INTERVAL ON PLOTTER | =200 SEC |
| START CHANNEL | =1 |
| END CHANNEL | =1 |
| DATE | =13 JAN 1986 |
| TIME | =15:09:56 |
| LOWER PLOT TEMP | =65 |
| UPPER PLOT TEMP | =80 |
| TIME/PLOT (PLOTTER) | =8 HOURS |
| TIME/PLOT (CRT) | =60 MINUTES |

**PLOTTER** **RETURN** **WEIGHT**

**SELECT** **START** **ABORT**

Figure 4 Typical Tuning Menu

| | |
|---|---|
| Proportional Gain | **Control parameter** for gain of room control loop |
| Integral Gain | **Control parameter** for amount of integral or reset action in room control loop |
| Proportional Action #2 | **Control parameter** for gain of supply air control loop |
| Integral Action #2 | **Control parameter** for amount of integral or reset action in supply air control loop |
| Valve Gain | **Control parameter** for increasing or decreasing overall gain of supply air loop |
| Sampling Interval | **Control parameter** for how often the temperatures are sampled |
| Plot Interval on Crt | How often temperature plots are updated on the CRT |
| Plot Interval on Plotter | How often temperature plots are updated on the plotter |
| Start Channel | Which channel is the first channel to use on the scanner for room temperatures |
| End Channel | Which channel is the last channel to use on the scanner for room temperatures |
| Date | Current Date |
| Time | Current Time (Military Time) |
| Lower Plot Temp | Lower Limit of Plotting for scaling temperature plots |
| Upper Plot Temp | Upper limit of plotting for scaling temperature plots |
| Time/Plot (Plotter) | Controls length of time represented by a single temperature plot on the plotter |
| Time/Plot (CRT) | Controls length of time represented by a single temperature plot on the crt |

Figure 5 Definition of Parameters on Tuning Menu

TEMPERATURE CONTROLLER

```
REFERENCE   70.0 DEG. F.
ROOM= 69.99 DEG. F.
COIL= 68.09 DEG. F.
ELAPSED TIME= 185.48E+01 SEC.

              KP1=25.000E-01      KI2=10.000E-03
E1=+68.298E-02                   I1=+19.770E+02
O1=+50.025E+00
E2=-18.952E+00                   I2=-95.398E+03
O2=+18.08E+00
VALVE NUMBER = 18

    DATA WILL BE PLOTTED ON PLOTTER

TO ADJUST REFERENCE TURN KNOB

TUNE      PLOTTER   WEIGHT              RUN
RESET     STOP      PLOT      VALUES    ABORT
```

Figure 6 Typical Main Menu

While the computer is controlling the temperature of the room, one may still change some of the parameters. One can change the temperature setpoint in the room by turning the thumbwheel on the keyboard, while the "TEMPERATURE CONTROLLER" screen is displayed. As the wheel is turned, the numbers next to the word "REFERENCE" will change, indicating the changing setpoint. One can turn the function of data plotting on the plotter on and off by pressing the "PLOTTER" key. If the plotter is off, pressing the key will turn it on and if the plotter is on, pressing the key will shut it off. Pressing the "TUNE" key causes the "TUNING" screen to be displayed, enabling changes to be made to be made not available at the other screen. (Pressing the "RETURN" function key while the "TUNING ADJUSTMENTS" screen is displayed causes the "TEMPERATURE CONTROLLER" screen to be displayed again.) Pressing the "PLOT" key while the "TEMPERATURE CONTROLLER" screen is displayed causes a plot of the temperatures to be plotted on the display. Pressing the "VALUES" key while the plot is on the display, returns the "TEMPERATURE CONTROLLER" screen. Pressing the "WEIGHT" key causes a screen to be displayed on which selections can be made of which temperature probes will be used in the average for controlling the temperature in the room and which temperatures will be ones plotted on the plotter and on the display. No more than four temperature plots are allowed on the screen at one time. Pressing the "RESET" key sets the accumulator for the integral action in the controller to zero. Pressing "STOP" and "RUN" stops and starts the control program. Pressing "ABORT" stops and exits the program.

During normal program execution, the computer samples the temperatures in the room once per sampling interval, computes the average temperature in the room and at the supply duct and computes a "Valve Number" for the cooling coil. Once every "CRT plot interval" the temperature plot on the display is updated (whether the plot is on or not). Once every "Plotter plot interval", the same thing is done for the temperature plot on the plotter.

For additional information on the operation and structure of the control program, there is a complete listing in the Appendix and also a description of the thermistor sensor resistance-to-temperature conversion calculations and the controller calculations.

Disk Drive

On the shelf below the computer is a Hewlett Packard 82901 M Flexible Disk Dive unit. It is connected to the computer via an HPIB cable and is intended to be turned on at all times. The disk drive unit is used to provide additional disk space for the time when the whole system is configured to automatically restart after a power outage. In this configuration, the following disks should be present in the dual disk drive unit:

| | | |
|---|---|---|
| Language Extensions | : | Drive 0 |
| Tempcon | : | Drive 1 |
| RAM Basic | : | Computer Disk Drive |

At present, the dual disk drive unit is NOT in use. When it is in use it will require annual cleaning as does the drive in the computer.

Plotter

The plotter used is a Hewlett Packard 7245A Plotter and it is located next to the computer. It is connected to the computer via an HPIB cable and it is recognized by the computer as device 705.

The main service that this device requires is that it must be kept supplied with paper. This is done by the people in the NC Shop supervisor's offices. The paper is thermal paper and is available from stores.

To replace the paper, take hold of the cover on the right side of the paper path on the plotter. It swings up and open to the right. Directions for loading the paper are printed inside the cover and should be followed.

Once the paper has been loaded, the RESET key on the left front of the plotter should be pressed once to reset the plotter, since normally when the plotter runs out of paper, an error light will light on the front of the plotter which needs to be cleared. Next the PAUSE key on the computer should be pressed, followed by the RUN key. This sequence will restart the control program.

Data Acquisition And Control Unit

The Acquisition and Control Unit (DACU) is a Hewlett Packard 3421A. It is located below the computer and is connected to it via an HPIB cable and is connected to the Controller Chassis via 2 ribbon cables. The unit is recognized by the computer as device 709.

Two functions are performed by the DACU. For the first function, the unit is used in the 4 wire resistance measurement mode

to measure the resistance of the 9 temperature sensors. For the second function, the unit is used in the digital output mode to drive the I/O Chassis to control the position of the cooling valve.

The main thing to check on the unit is that the switch on its front panel is on at all times and that it is always plugged in. If the unit is left on while not plugged in for an extended period of time (say a week), there are batteries within the unit which will need to be replaced before the unit will operate again from line power.

Documentation for the DACU as provided by HP is available from the Applied Systems Development Group.

I/O Chassis For NC Shop Temp. Controller

This chassis was custom built at LLNL and is located on the shelf below the computer with the Data Acquisition and Control Unit and the Dual Disk Drive Unit. It serves as a termination point for all of the temperature sensors, houses the D/A converter for the cooling valve current loop, provides digital readout display of the current output to the valve and also provides a means of bypassing the control computer so that the valve current can be changed manually. Blueprints for the chassis and a manufacturer's specification sheet for the D/A converter are included in the Appendix.

As indicated earlier, this chassis can be used to manually control the current output to the chilled water valve. This is done by changing the position of a switch, accessible through the top cover of the chassis, from the "AUTO" to "MAN" position. Once the switch has been changed, the current can be changed by turning a knob located next to the switch. As the knob is turned, the current will change and the digital readout on the front of the chassis will change accordingly.

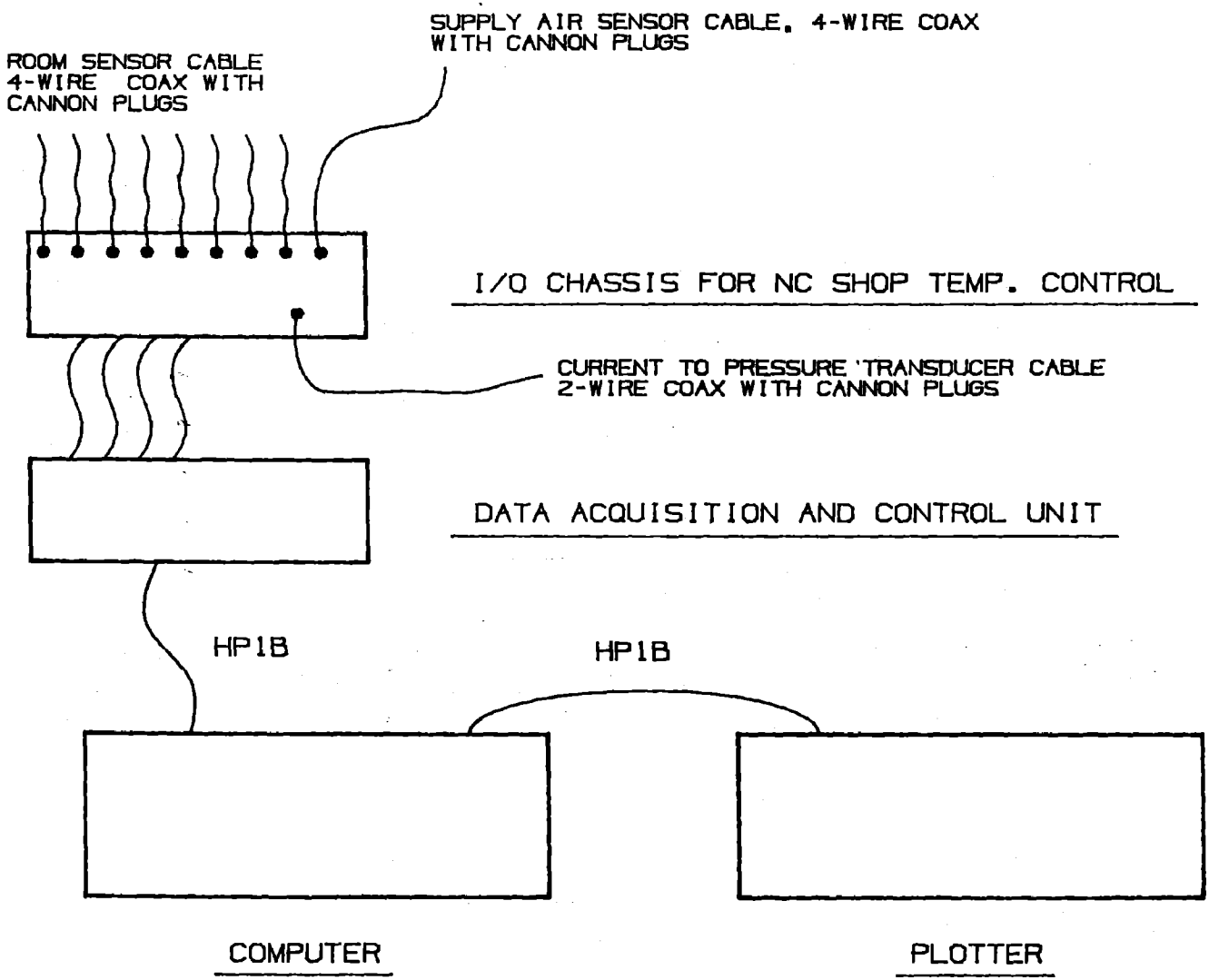


Figure 7. Cabling Diagram for Computer and Peripherals

Temperature Sensors

Nine temperature sensors are used on the control system. Eight of them are located around the inside perimeter of the NC Shop, Room 1351 and one of them is located inside the supply air duct of the AHU immediately downstream of the blower. All of the sensors are the same and are Yellow Springs Model 405 Thermistor Air Temperature Sensors. They are available from stores.

Current To Pressure Transducer

The current to pressure transducer is located in an enclosure on the east side of the AHU. Its function is to convert a 4-20 Ma signal from the I/O Chassis and convert it to a 3-15 psi signal which is used to position the chilled water valve on the main cooling valve. It is a Conoflow Model GT18ED and must be ordered from the a distributor if it needs to be replaced.

Two settings may require adjustment on this unit from time to time. One is called the "gain" and the other is called the "zero". These two adjustments are used to ensure that with 4 mA of input 3 psi is output and that with 20 mA of input 15 psi is output. The gain determines how sensitive the unit is to current changes and the offset determines what the minimum pressure output is. The zero adjustment is on the bottom of the unit, via an adjustment screw. The gain adjustment is on the top of the unit. The gain should be adjusted so that if the current applied increases by 4 mA, the output air pressure increases by 3 psi. With the gain properly adjusted, the zero adjustment should be used to cause the output pressure to be 3 psi when the supply current is 4 mA.

Cooling Coil/AHU/Cooling Coil Valve

The cooling coil, air handling unit and the cooling coil valve are all located on the roof above room 1351. They are depicted in Figure 8. These units are to be maintained by Plant Engineering Air Conditioning mechanics. There are however, a few things which should be checked if there is a problem with temperature control in the room.

First of all, one should always check to be sure that the blower is running. Sometimes after a power outage, the motor on the blower is not turned back on. The switch is mounted on the east side of the AHU. The other thing to check is that there are no air leaks in any of the pneumatic control lines connecting the current to pressure transducer to the chilled water valve on the main cooling coil. Also the diaphragm on the chilled water valve should be checked from time to time to ensure that it is not leaking.

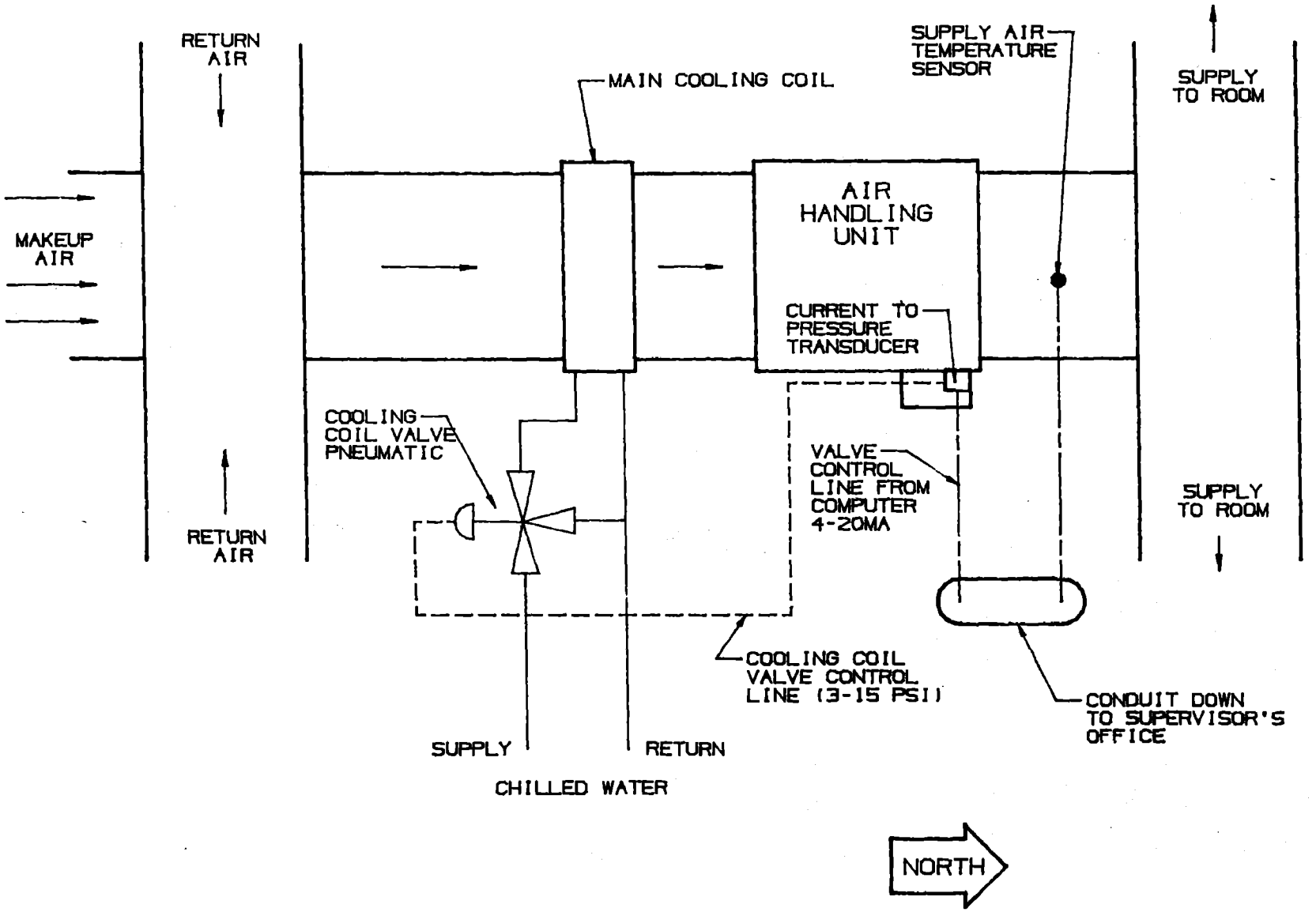


Figure 8. Temperature Control Components on the Roof

Makeup Air Temperature Control System

The makeup air temperature control system is located on the south side of the AHU on the roof. It consists of a cooling coil and chilled water control valve, a heating coil and a hot water control valve and a single proportional pneumatic controller which controls both the chilled and hot water valves, both of which are pneumatically operated. The controller is mounted in an enclosure along with the current to pressure transducer for the main room temperature control system. The setpoint should be set at about 70° F. The makeup air temperature control system is shown in Figure 9.

It is the responsibility of Plant Engineering Air Conditioning Mechanics to maintain the makeup air temperature control system. It is useful to periodically check the pneumatic lines and the diaphragms in the valves for leaks.

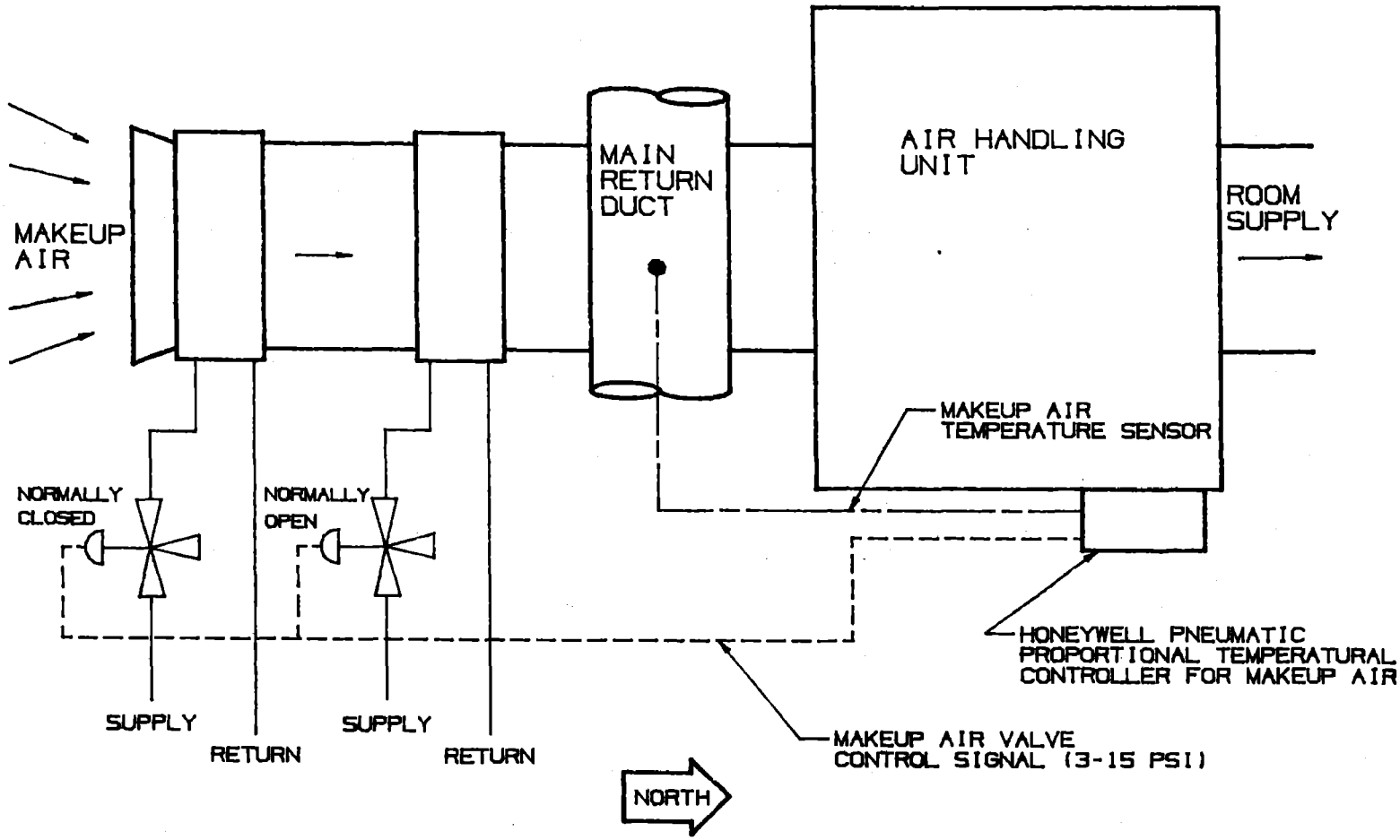


Figure 9. Makeup Air Temperature Control System

# APPENDIX

Contents

Engineering Drawings
D/A Converter Specifications
Current to Pressure Transducer Spec's
Control Software Listing
Control Equations
Resistance to Temperature Conversion
Quick Start Manual
Trouble Shooting Guide

Engineering Drawings

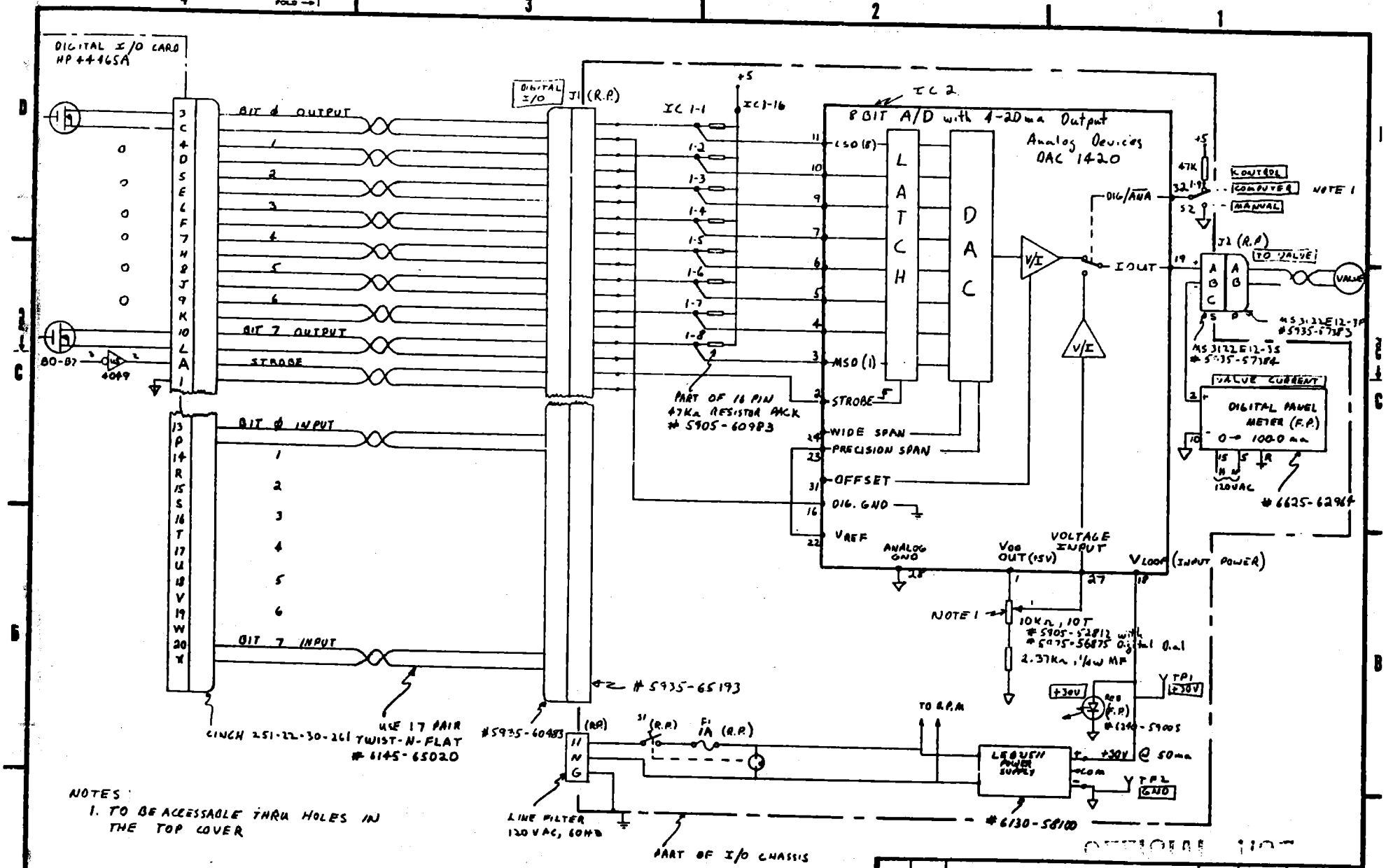


NOTES:

1. TO BE ACCESSABLE THRU HOLES IN THE TOP COVER

THIS DOCUMENT IS THE PROPERTY OF THE UNIVERSITY OF CALIFORNIA LAWRENCE LIVERMORE NATIONAL LABORATORY. REPRODUCTION PROHIBITED WITHOUT PERMISSION OF THE ELECTRONIC ENGINEERING DEPARTMENT.

| | |
|---|---|
| DIV/GROUP | I/MC |
| ORIGINATOR | H. HANSEN |
| DRAWN | O. LISTON 9/1/83 |
| CHECKED | DATE |
| APPROVED | DATE |

| REV | ZONE | DESCRIPTION | DATE | DRAWN | APPROVED |
|---|---|---|---|---|---|

TITLE: I/O CHASSIS FOR NC SHOP TEMP. CONTROLLER - VALVE CONTROL

LAWRENCE LIVERMORE LABORATORY
ELECTRONICS ENGINEERING DEPARTMENT
University of California/Livermore, California

| GROUP | BASIC PACKAGE NO. | SUB | TYPE | REV |
|---|---|---|---|---|
| LEA | 86-2100 | 01 | -S | 0 |

SIZE E — SHEET 3 OF 3

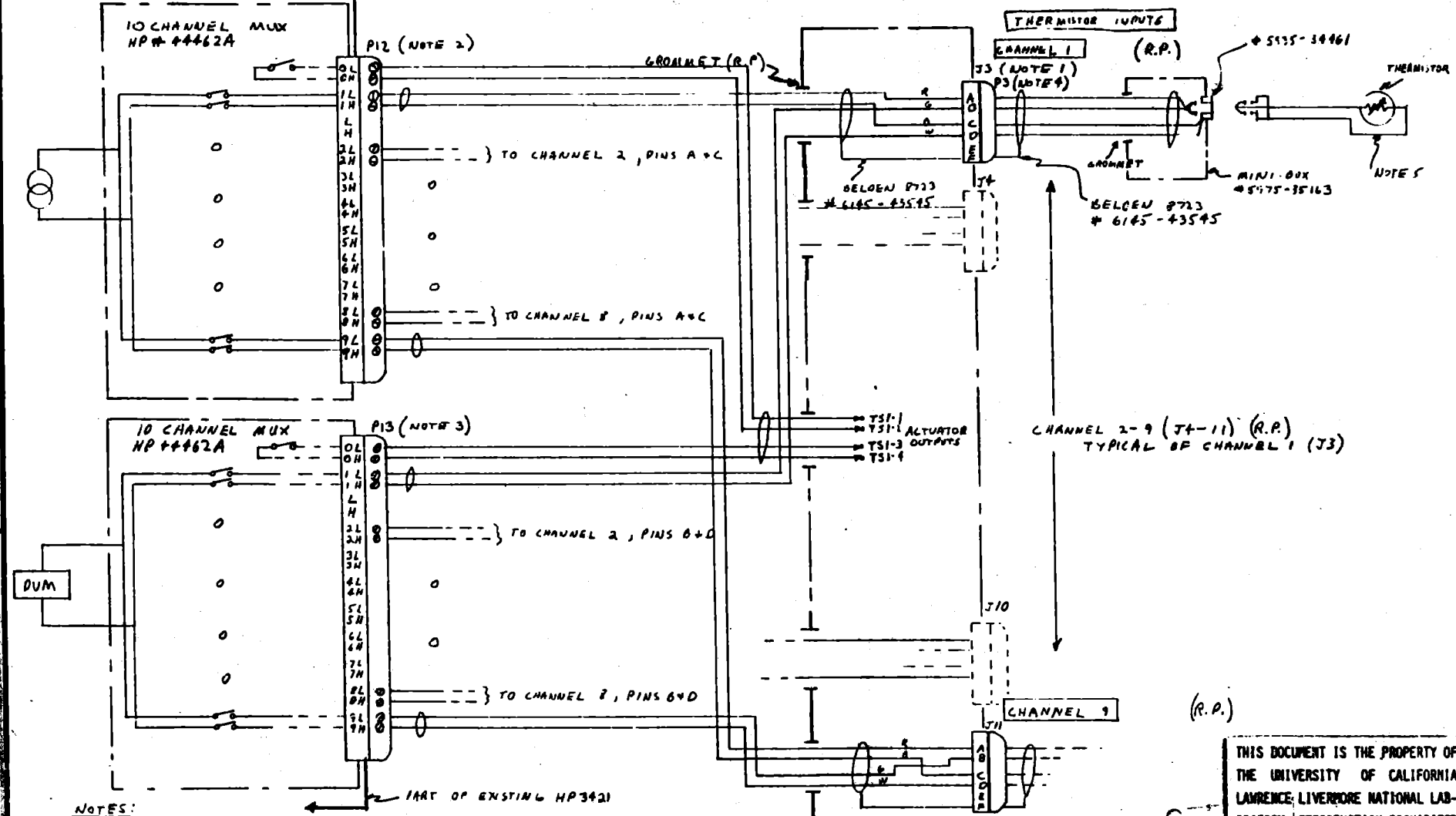


NOTES:

1. CONNECTORS J3 → J11 ARE MS 3122 #10-6P, # 5935-51423
2. CONNECT P12 TO SLOT
3. CONNECT P13 TO SLOT
4. CONNECTORS P3 → P11 ARE MS 3126 F10-6S, # 5935-51438
5. THERMISTORS ARE YSI 405, # 5905-66244

THIS DOCUMENT IS THE PROPERTY OF THE UNIVERSITY OF CALIFORNIA LAWRENCE LIVERMORE NATIONAL LABORATORY. REPRODUCTION PROHIBITED WITHOUT PERMISSION OF THE ELECTRONIC ENGINEERING DEPARTMENT.

| REV | ZONE | DESCRIPTION (SEE REVISION SHEET FOR HISTORY) | DATE | DRAWN | APPROVED |
|---|---|---|---|---|---|

DIV/GROUP: 1/MC
ORIGINATOR: H. HANSEN
DRAWN: D LISTON DATE: 9/12/86
CHECKED: DATE:
APPROVED: DATE:

TITLE: NC SHOP TEMPERATURE CONTROLLER
THERMISTOR INPUT

Lawrence Livermore National Laboratory
ELECTRONICS ENGINEERING DEPARTMENT
University of California/Livermore, California

| GROUP | BASIC PACKAGE NO. | SUB | TYPE | REV |
|---|---|---|---|---|
| LEA | 86-2100 | 01 | -S | 0 |

SIZE A
SHEET 2 OF 3

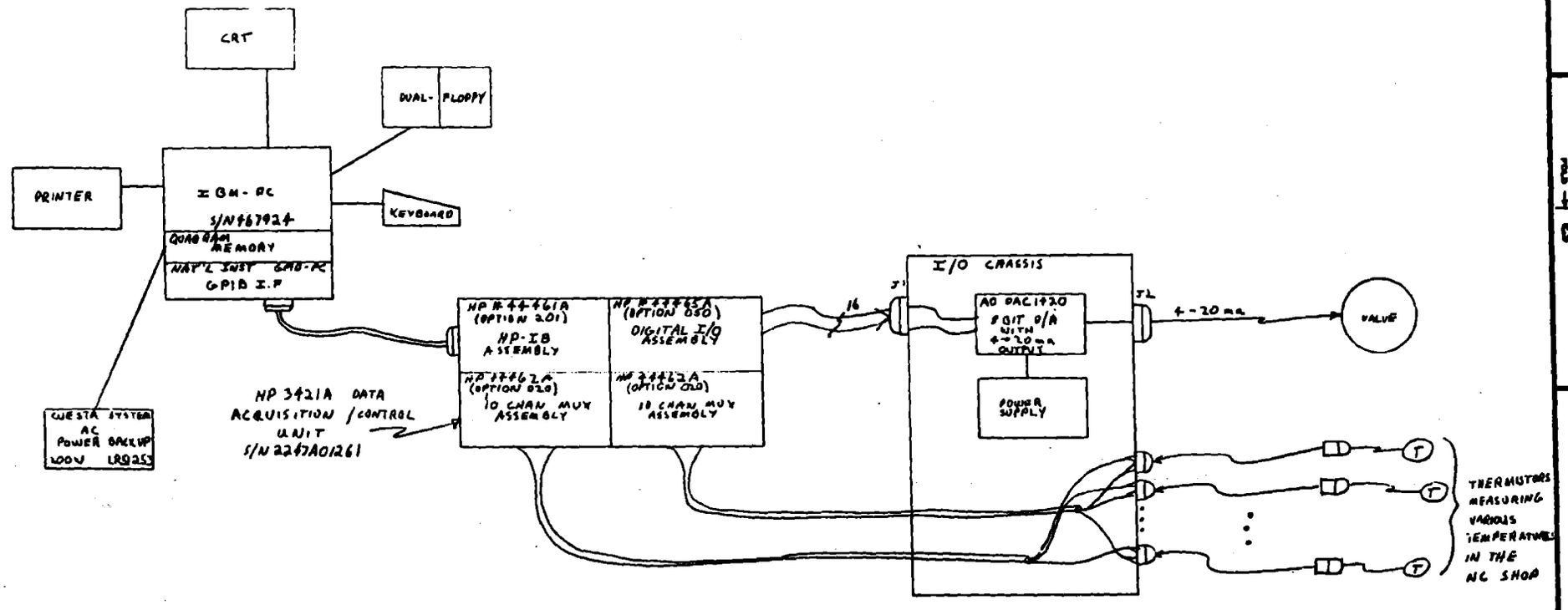


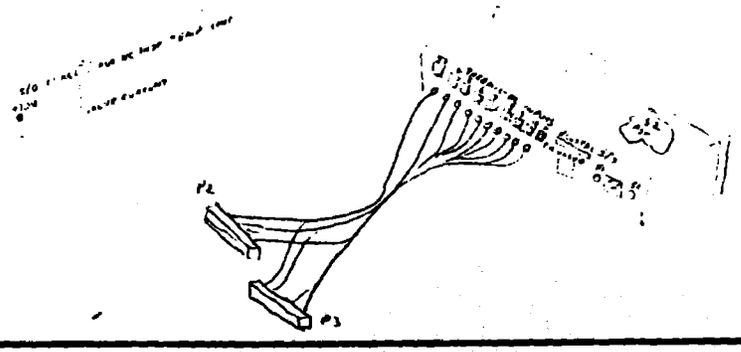


THIS DOCUMENT IS THE PROPERTY OF THE UNIVERSITY OF CALIFORNIA LAWRENCE LIVERMORE NATIONAL LABORATORY. REPRODUCTION PROHIBITED WITHOUT PERMISSION OF THE ELECTRONIC ENGINEERING DEPARTMENT.

| REV | ZONE | DESCRIPTION | DATE | DRAWN | APPROVED |
|---|---|---|---|---|---|
| | | | | | |

DIV/GROUP: 1/MC
ORIGINATOR: H. HANSEN
DRAWN: D. LISTON DATE: 8/27/83
CHECKED: DATE
APPROVED: DATE

TITLE: NC SHOP TEMPERATURE CONTROLLER - BLOCK DIAGRAM

LAWRENCE LIVERMORE LABORATORY
ELECTRONICS ENGINEERING DEPARTMENT
University of California / Livermore, California

| GROUP | BASIC PACKAGE NO. | SUB | TYPE | REV |
|---|---|---|---|---|
| LEA | 86-2100 | 01 | -S | 0 |

SIZE B — SHEET 1 OF 3

## D/A Converter Specifications

# 4-20mA, 8- and 10-Bit Digital-to-Analog Converters

## DAC1420, DAC1422

### FEATURES
- ISA S50.1 Type 3 Class U Output
- Guaranteed Monotonic 0 to +70°C
- Totally Powered From Loop Supply
- Wide Supply Range +10V to +36V
- Self-Contained Data Latch
- Auxiliary Analog Input
- No Minimum Load Requirement

### APPLICATIONS
- Direct Digital Controllers
- Computer Based Process Control Systems
- Digital Pressure Transducers

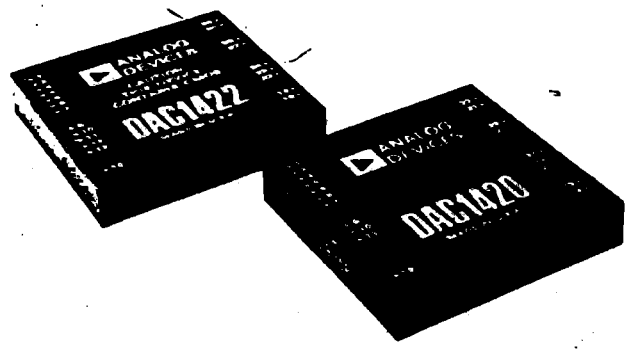


### GENERAL DESCRIPTION
Models DAC1420/1422 are 8/10-bit D/A converters with analog output in the form of a 4-to-20mA current source. Specifically designed for the process-control industry, and requiring but a single +10V to +36V power supply, they meet the requirements of ISA standard S50.1 for Type 3 Class U (3-wire nonisolated) output. Included in the 2" X 2" X 0.4" module are a set of CMOS latches, an 8/10-bit CMOS DAC, two analog-to-current converters—one reflecting the translated output from the DAC, the other an auxiliary backup analog input—a current amplifier, and a regulator & reference. Figure 1 shows the basic connections and operation of the devices with an external loop supply and a remote load, $R_L$, supplied via a twisted pair.

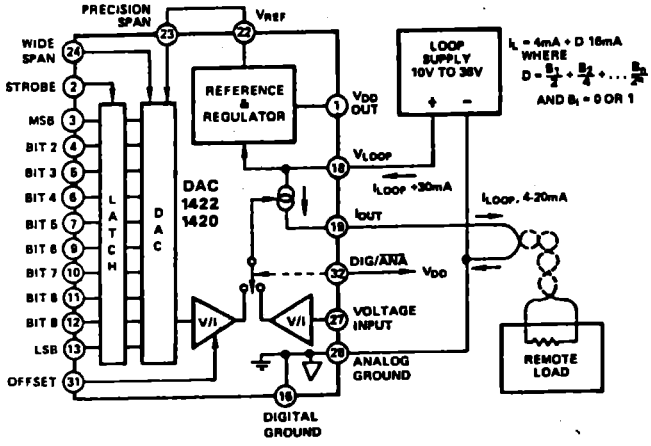


*Figure 1. Block Diagram of the DAC1422 in a Simple Application*

### HOW LOOP DACS WORK
Figure 2 is a more-detailed version of Figure 1, showing some of the options available to the user in applying the DAC1420/1422. The basic digital-to-analog conversion is performed by a circuit employing an Analog Devices CMOS integrated-circuit multiplying DAC. Its output is a voltage, which is converted to a 4-to-20mA output current by a V-to-I converter circuit.

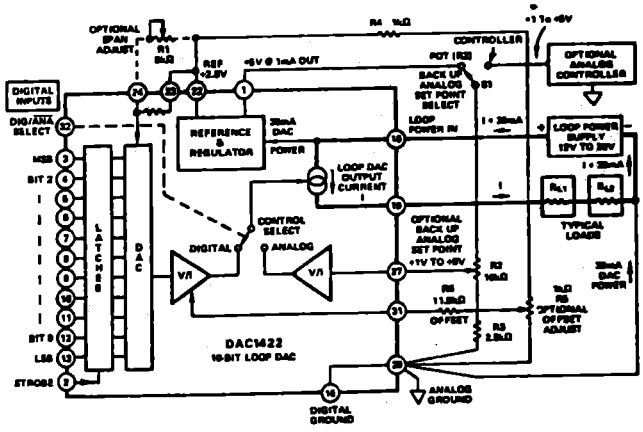


*Figure 2. Loop DAC Block Diagram: Connections and Adjustments*

*(continued on page 3)*

256 16ma $\frac{2^4}{2^8}$

| | |
|---|---|
| 0 | 4 |
| 1 | 4.0625 |
| 2 | 4.125 |

Information furnished by Analog Devices is believed to be accurate and reliable. However, no responsibility is assumed by Analog Devices for its use; nor for any infringements of patents or other rights of third parties which may result from its use. No license is granted by implication or otherwise under any patent or patent rights of Analog Devices.

P.O. Box 280; Norwood, Massachusetts 02062 U.S.A.
Telex: 924491 Cables: ANALOG NORWOODMASS

# SPECIFICATIONS

(typical @ +25°C, $V_{LOOP}$ = +24 volts unless otherwise specified)

| MODEL | DAC1420 | DAC1422 |
|---|---|---|
| **DIGITAL INPUTS** | | |
| Resolution | 8 Bits | 10 Bits |
| Levels | | |
| (Except "$\overline{ANA}$/DIG") | CMOS $V_{DD}$ =5V | • |
| | "1" = >3.3V @ 1μA | • |
| | "0" = <1.7V @ 1μA | • |
| $\overline{ANA}$/DIG Input | | |
| Impedance | 12kΩ | • |
| "1" | "1" = >2.4V @ 140μA | • |
| "0" | "0" = <0.7V @ 0μA | • |
| Latch Strobe | Rising Edge Sensitive | • |
| $T_{DH}$ (Data Hold) | 0ns (min) | • |
| $T_{DS}$ (Data Set-Up) | 50ns (min) | • |
| **ANALOG OUTPUT** | | |
| Type | ISA S50.1 Type 3 Meets and Exceeds Class U | • |
| Nominal Range | 4-20mA | • |
| Compliance | $V_{LOOP}$ -6V | • |
| Output Impedance | >4MΩ @ dc | • |
| Minimum Load | 0Ω | • |
| **STABILITY AND ACCURACY** | | |
| Monotonicity | Guaranteed, 0 to +70°C | • |
| Integral Nonlinearity | ±1/2LSB | • |
| Differential Nonlinearity | ±1/2LSB | • |
| Temperature Stability | | |
| Offset | 25ppm FSR/°C | • |
| Span | 50ppm FSR/°C | • |
| Adjustability | ±10% each, Offset and Span | • |
| Initial Error, Untrimmed[1] | ±2LSB's each, Offset and Span | • |
| Power Supply Rejection | 20ppm FSR/V | • |
| Noise, 10Hz to 100Hz[2] | 4mV p-p | • |
| **ANALOG BACKUP INPUT** | | |
| Range[3] | 1 - 5V | • |
| Gain | 4mA/Volt (1-5V produces 4-20mA) | • |
| Accuracy | ±3% | • |
| Stability | ±100ppm FSR/°C | • |
| Input Impedance | $10^8$ Ω | • |
| **POWER** | | |
| Loop Supply, minimum | +10V | • |
| maximum | +36V | • |
| Supply Current | $I_{OUT}$ +30mA | • |
| **ENVIRONMENTAL** | | |
| Operating Temperature | 0 to +70°C | • |
| Storage Temperature | -25°C to +85°C | • |
| **SIZE** | 2" X 2" X 0.4" | • |

NOTES
[1] Both offset and span error are adjustable to zero. See Figures 5 and 6 for details.
[2] Load = 750Ω‖ 1,000pF.
[3] This input should not exceed +5.5V and should be grounded if not used.
Specifications subject to change without notice.

## OUTLINE DIMENSIONS

Dimensions shown in inches and (mm).

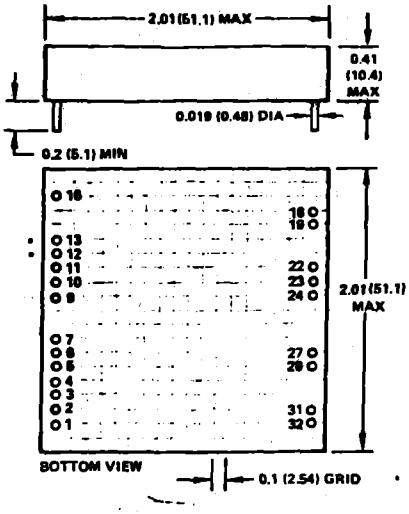


NOTE:
Module Weight: 1.6 ounces (45 g)

*Pins 12 & 13 appear on DAC1422 only.

| DIGITAL INPUT | NOMINAL CURRENT OUTPUT |
|---|---|
| Binary Code | |
| 1 1 1 1 1 1 1 1 1 1 | +19.984mA |
| 0 0 0 0 0 0 0 0 0 1 | + 4.016mA |
| 0 0 0 0 0 0 0 0 0 0 | + 4.000mA |

*Table 1. Nominal Input-Output Relationships*

### DAC1423: ISO-DAC™

For applications in hostile environments, where ground loop elimination is required, consider Analog Devices model DAC1423. This isolated 10-bit 4-20mA DAC offers the following:

- High Voltage Protection (1500V dc)
- 8- and 10-bit Bus Compatibility
- Fail Safe Design
- Increment/Decrement Back-Up
- Bumpless Transfer

*(continued from page 1)*

An important feature of the loop DAC is the self-contained input latch, which permits many DACs to operate from a single parallel bus. The analog output of the DAC changes when a new digital word is latched; i.e., the latch is strobed by a rising-edge signal to latch the digital data appearing on the bus. The DAC output current in this case, is shown driving a pair of external loads in series ($RL_1$ and $RL_2$). The maximum allowable value of the total load resistance is determined by the ratio of the compliance voltage, $V_{LOOP}-6V$, and full-scale output, 20mA. With $V_{LOOP}$ at 36V, the maximum load resistance is 30V/20mA = 1.5kΩ. Since the DAC draws an additional 30mA of operating power from the loop supply, the supply should be rated at 50mA per DAC.

The DAC requires no digital power; it takes all of its power from the loop supply. It can furnish an output of 5V at up to 1mA for low-power CMOS logic. To operate the DAC, the +2.5V reference is jumpered to the PRECISION SPAN input, providing a span accuracy of ±16mA ±0.2%. If greater accuracy, or a different value of span, is required, an external resistor may be connected between the reference and the WIDE SPAN input, for a ±10% range of span adjustment.

The DAC1422's output offset (actually the 4mA output setting) is factory-trimmed to within ±0.2% of full scale (2LSB). If greater precision is required, the resistor network, R4, R5, R6, is connected between the reference and the OFFSET terminal. Because of interaction between SPAN and OFFSET, both adjustments should be repeated so as to converge on an accurate setting.

A key feature of the loop DAC is the ability to revert automatically to a backup analog input (1 to 5V, or 250Ω load on the output of a 4-to-20mA analog controller) if the computer crashes or loses power, since loop power can be supplied independently. A solid-state analog switch, its position controlled by the logic level on DIG/$\overline{\text{ANA}}$ (logic 1 for digital), connects either the DAC output of the backup input to the controlled current source.

This feature is versatile. With the computer's power bus connected to DIG/ANA, it will automatically switch to analog if the computer dies, and the separately powered DAC's output will stay alive even though the computer loses power. Or DIG/ANA can be connected to a digital command output which restores analog if the computer is performing anomalously.

The backup analog input can come from the fixed +5V output and a resistor network, or it can be connected to a backup analog controller, as noted in Figure 2 (S1 to right); this backup might be the original equipment in a system being changed over to digital control.

## DIGITAL CONTROL

The principal application for these loop DACs is in *direct digital control of analog process loops.* Figure 3 is a functional block diagram of a typical system containing several loop DACs. It consists of a computer, a set of loop DAC's, a data-acquisition system, the controlled process, and an independent loop power supply. System setpoints defining the desired values of process variables—whether determined manually, by a higher-level host computer, or by computation within the computer—are compared with the process inputs; and output values for the actuators are computer. The parallel digital output bus from the computer can be connected to all the loop DACs. The data in each DAC is then updated, either sequentially or at random, by a strobe signal from the computer, addressed to the desired DAC.

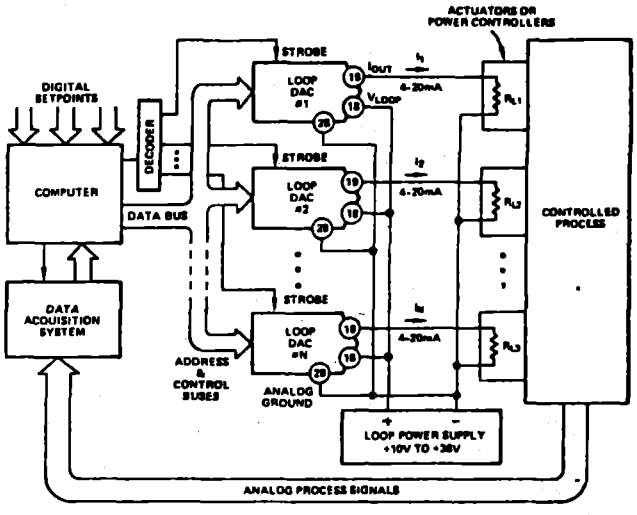


*Figure 3. Typical Applications of Loop DAC's*

The 4-to-20mA output of each DAC is a direct function of the 8- or 10-bit word which has been latched into its input register. Each current output is transmitted to its remote actuator/controller and develops a voltage across its load resistance. The return current may be over a common line, as shown in Figure 3, or over a set of individual twisted pairs with the common connection at the loop supply.

## POWER/OUTPUT CONNECTIONS (Figure 4)

The DAC1420/1422 outputs are current sources designed to drive a grounded load. The maximum value of $R_L$ is dependent upon the loop supply and full scale output current according to the formula:

$$R_L\ (\max) = \frac{V_{LOOP} - 6V}{I_{OUT}\ (FSR)}$$

For example, at 20mA, $V_{LOOP}$ = 24 Volts, the maximum $R_L$ is 900Ω. There is no minimum $R_L$ required; the DAC1420/1422 maintain rated performance into a short circuit load.

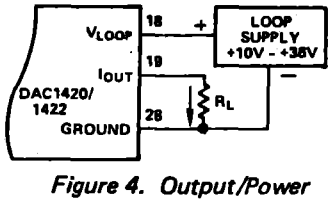


*Figure 4. Output/Power Connections*

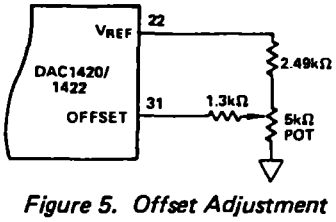


*Figure 5. Offset Adjustment Circuit*

**OFFSET ADJUSTMENT (Figure 5)**
The DAC1420/1422 are factory trimmed for offset to within ±0.2% FSR (2LSB's). For this performance, leave the offset pin (pin 31) unconnected. If potentiometer trimming is required, the circuit in Figure 5 will provide approximately ±10% offset adjustment. For greater adjustment resolution, increase the resistor in series with pin 31.

**SPAN ADJUSTMENT (Figures 6a & 6b)**
If no span adjustment is desired, connect pin 22 ($V_{REF}$) to pin 23 (Precision Span) for factory trimmed span accuracy of ±0.2% (2LSB's). If span adjust is required, the circuit in Figure 6b will allow ±10% minimum span adjustability. To increase the resolution of the adjustable span, use a resistor in series with the pot and reduce the value of the pot accordingly.

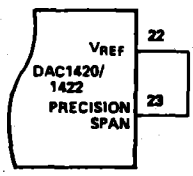


*Figure 6a. Factory Trimmed*

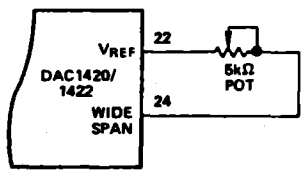


*Figure 6b. Span Adjust*

**STROBE INPUT**
The input latches in the DAC1420/1422 are CMOS rising edge sensitive devices. The last loaded digital word remains latched during backup manual operation providing the strobe input does not change. The user is cautioned that the digital inputs remain active even when the control is switched to analog.

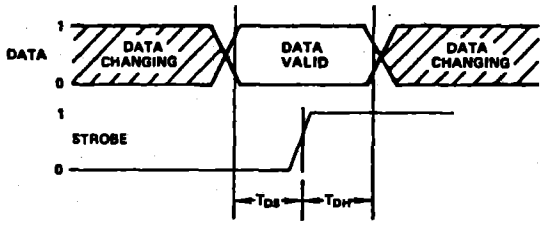


*Figure 7. Input Timing*

**$V_{DD}$ OUTPUT**
The $V_{DD}$ output may be utilized as a power supply for external CMOS circuitry such as tri state or buss transceivers, up to a limit of 1mA $I_{DD}$. If used in this fashion, it is recommended that the user add a 0.1μF bypass capacitor to ground from this pin to keep externally injected "glitches" from disturbing the internal circuitry of the DAC1420/1422.

**ANALOG BACKUP INPUT**
An Analog Backup Input is provided for use in controlling the output in case the source of digital inputs fail. This is a high impedance voltage input scaled so that 1-5 volts input gives 4-20mA output and is unaffected by the offset and gain adjustments. To prevent induced errors, this input should not exceed +5.5 volts and should be grounded if not used. Switchover to the analog input is provided by pin 32, the Digital/$\overline{\text{Analog}}$ control input. When at Logic "1" the 4-20mA output is controlled by the digital input. When at Logic "0", the 4-20mA output is controlled by the analog input. Figure 8 shows one possible use of the analog input: to provide for potentiometer-variable control in the event of computer failure. The $V_{DD}$ OUT (pin 1) is used as a 5 volt reference for the potentiometer. If this feature is not used, connect pin 32 to pin 1 and pin 27 to ground.

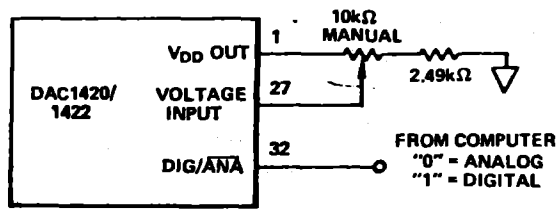


*Figure 8. Potentiometer Backup Control*

**NOISE AND BANDWIDTH CHARACTERISTICS**
The DAC1420/1422 are used in control systems of modest bandwidth and speed. The noise specification given in the Electrical Characteristics is the typical noise that would be seen under that condition of load and bandwidth. The noise seen at the output of the DAC depends upon the capacitive and resistive load and the bandwidth of the instrument doing the measurement. The majority of the output noise is generated at approximately 65kHz by an internal charge pump inverter which supplies power to the internal DAC. Since the noise fundamental is at a much higher frequency than the systems where the DAC1420/1422 are likely to be used, the output noise should be observed over a limited bandwidth. Therefore, Analog Devices recommends the use of an external capacitance typically in the range of 1000pF to 1μF. This capacitance includes the distributed capacitance of any cable connected to the output of the DACs as well as any value of discrete capacitance that may be used. The capacitive load also has an effect on the time constant of the DAC output. Capacitive load and load resistance form an RC time constant. For example, it takes approximately 7 time constants for the output to step from 4mA and be within 0.2% of full scale, 20mA.

Current to Pressure Transducer Specifications

**CONOFLOW**
**REGULATORS & CONTROLS**
Division of ITT Grinnell Valve Co., Inc.
P.O. Box 768
St. George, S. C. 29477
(803) 563-9281 TELEX 805062

R&C
FOREMOST IN CONTROL ELEMENTS

# INSTRUCTION AND MAINTENANCE MANUAL
# I/P TRANSDUCER
# GT18, GT38, GT58
# *GT15, GT35, GT55

## OPERATION

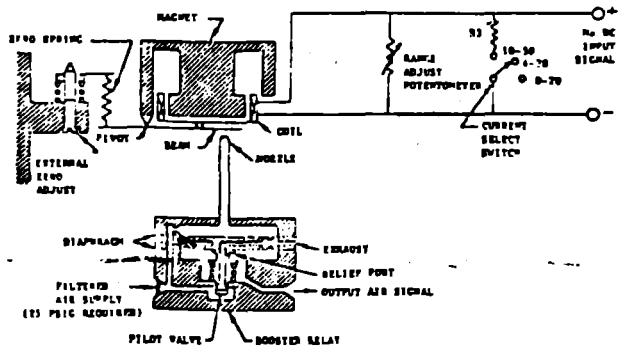


FIGURE 1

## DIMENSIONS

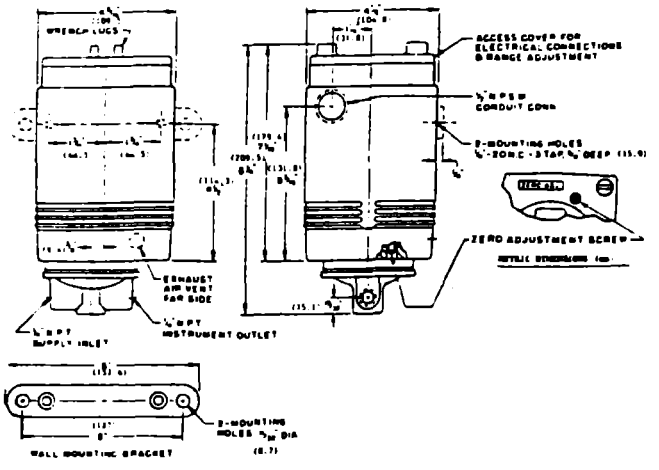


FOR CERTIFIED DIMENSIONAL DRAWING, REFER TO A28-9

## PRINCIPLE OF OPERATION

GT__8 Inputs 0-20, 4-20 or 10-50 mA DC Low Impedance

*GT__5 Input 1-5 mA DC High Impedance. Outputs (All Models) 3-15, 3-27 or 6-30 PSIG.

## LOW CAPACITY MODELS

In the direct acting mode, an increase in the input signal causes the coil to move away from the magnet which moves the balance beam toward the nozzle. This reduces the flow through the nozzle increasing the output pressure.

A decrease in the input signal allows the coil to move toward the magnet which moves the balance beam away from the nozzle. This allows the flow through the nozzle to increase reducing the output pressure.

In the reverse acting mode, an increase in the input signal causes the coil to move toward the magnet instead of away from it since the direction of the current through the coil is reversed. An increasing signal. therefore. causes a proportionally decreasing output.

Intrinsically safe models are not field reversible but can be purchased in the direct or reverse acting mode. Refer to C.E.D. sheet C-9008 for proper identification.

## INSTALLATION

ELECTRICAL CONNECTION: The electrical connection is made through a ½" NPSM conduit connection on the side of the transducer case. Unscrew the cover and remove the shunt wire connected to Terminals No. 1 and No. 2 before wiring the unit. Connect positive wire to Terminal No. 2 and negative wire to Terminal No. 1. For reverse-acting mode, connect positive wire to Terminal No. 1 and negative wire to Terminal No. 2.

**IMPORTANT:** Remove all metal chips from conduit before installation to prevent malfunction of the coil/magnet assembly.

RANGE SELECTOR SWITCH: GT__8 Series incorporated a range selector switch which can be positioned to accept a 4-20 or 10-50 mA DC input signal. Optional 0-20 mA DC input is available. The GT__5 Series is available in a 1-5 mA DC input signal (High Impedance).

PNEUMATIC CONNECTIONS: Connect the supply pressure tubing to the ¼" NPT inlet (marked "IN"). A clean, filtered air supply of 25 PSIG is required (35 PSIG required for outputs of 3-27 and 6-30 PSIG). To prevent contamination of the internal section of the transducer, a model GFH60XTKEG1C Airpak (Filter-Regulator) is recommended. The ¼" NPT outlet (marked "OUT") delivers a pneumatic signal in proportion to the mA DC input signal.

## ADJUSTMENTS

Should field adjustments be required, use the following calibration procedure:

1. Connect the recommended air supply to the inlet of the transducer and a pressure gauge to the outlet.
2. Connect the electrical input and set the input signal to the 0% value (e.g. 4 mA for a 4-20 mA unit).
3. Observe the output pressure. Adjust if necessary by turning the external zero adjust screw located under the cap near the pressure outlet connection.
4. Increase the electrical input signal to the 100% value.
5. Observe the output pressure. If adjustment is necessary, remove the cover and adjust the range potentiometer on the circuit board to obtain the required output.
6. The zero and range adjustments are interactive. After adjusting the range potentiometer it will be necessary to re-check the zero. Repeat steps 2 through 5 until both endpoints are at the required values.

## MAINTENANCE

Under normal conditions, no maintenance should be required. If disassembly is necessary, refer to "Pneumatic Trouble Shooting" section. It is important that clean, dry air be supplied to the unit at all times. A Conoflow model GFH60XTKEG1C Airpak (Filter-Regulator) is recommended for this purpose. Occasional replacement of the 5 micron filter in the Airpak is required. (Refer to Instruction and Maintenance Manual C-8009).

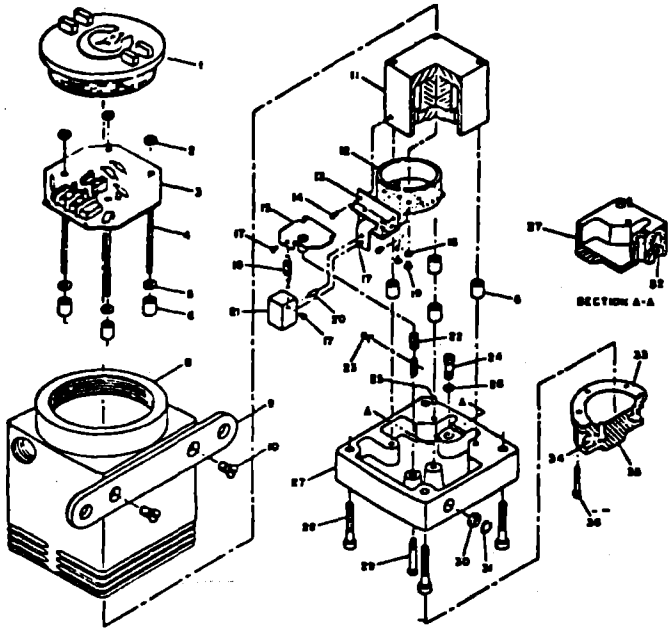


| Item No. | Description | Qty. Req'd. | Part No. |
|---|---|---|---|
| 1 | Cover | 1 | G6072367 / T101 |
| 2 | Hex Nuts (Brass) 8-32 N.C. | 4 | G6900202 / - - |
| 3 | Printed Circuit Board GT_8 Series/FM Approved | 1 | G6384420 / - - |
| | CSA Approved | 1 | G6384420 / - - |
| | 1-5 mA DC Input | 1 | G6072573 / - - |
| 4 | Studs (St. Cad. PLT) | 4 | G6073365 / J232 |
| 5 | Flat Fiber Washers | 4 | G6076384 / 04-71-02 |
| 6 | Spacer (Aluminum) | 8 | G6072839 / T-194 |
| 8 | Body | 1 | G6373740 / - - |
| 9 | Mounting Bracket | 1 | G6072482 / T122 |
| 10 | Flat Head Machine Screw ¼-20 N.C. x ½" Lg. | 2 | G6900091 / - - |
| 11 | Magnet Hsg. Sub-Ass'y | 1 | G6073175 / T213 |
| 12 | Coil Form Assembly GT_8 Series Std. | 1 | G6384700 / - - |
| | FM + CSA Direct Acting | 1 | G6073472 / - - |
| | FM + CSA Reverse Acting | 1 | G6384854 / - - |
| 13 | Flexure Subassembly | 1 | G6072722 / T183 |
| 14 | Round Head Mach. Screw 4-40 x 3/16" Lg. | 2 | G6900005 / - - |
| 15 | Zero Adjust Subassembly | 1 | G6072672 / T179 |
| 16 | Split Lock Washer #4 (St.l.) | 2 | G6900301 / - - |
| 17 | Round Head Machine Screw #4-40 N.C. x 3/16" | 2 | G6900005 / - - |
| 18 | Counterweight Spring | 1 | G6073316 / T-226 |
| 19 | Round Head Machine Screw #4-40 N.C. x 3/16" Lg. | 1 | G690005 / - - |
| 20 | Dowel Pin | 1 | G6076541 / 049202 |
| 21(2) | Counterweight Assembly | 1 | G6073373 / T-233 |
| 22 | Zero Spring | 1 | G6073332 / T229 |
| 23 | Cotter Pin 3/64"Dia. x ½" Lg. | 1 | G6900403 / - - |
| 24(3) | Nozzle 3-15 PSI Output | 1 | G6072656 / T177 |
| | 3-27 & 6-30 PSI Output | 1 | G6073613 / T268 |
| 25 | Roll Pin (Steel) | 1 | G6076202 / 046307 |
| 26(3) | "O" Ring (Buna "N") | 1 | G6076582 / 0510008 |
| 27 | Cap Assembly | 1 | G6362891 / - - |
| 28 | Fillister Head Machine Screw ½-20 N.C. x 1¼" Lg. | 4 | G6900090 / - - |
| 29 | Zero Adjust Screw | 1 | G6072714 / T-182 |
| 30 | Screen | 1 | G6016018 / D237 |
| 31 | Truarc Ring | 1 | G6076012 / 045612 |
| 32 | Orifice Insert | 1 | G6072474 / T119 |
| 33(3) | Gasket | 1 | G6073498 / T253 |
| 34 | Screen | 2 | G6072649 / T176 |
| 35 | Valve Body | 1 | G6072631 / T175 |
| 36 | Fillister Head Machine Screw 8-32 N.C. x ½" Lg. | 6 | G6900029 / - - |

Notes: (1) Cap Assembly Consists of:
Cap — Item 27
Orifice Insert — Item 32
Roll Pin — Item 25

(2) Counterweight Assembly Consists of:
Counterweight — Item 21
Dowel Pin — Item 20

(3) Recommended Spare Parts.

(4) For definition of catalog number, refer to Control Engineering Data Sheet C-9008.

(5) When ordering spare parts, specify complete catalog no., item no. and part no. This will permit positive identification and rapid handling of order.

## TROUBLE SHOOTING

### PNEUMATIC

1. Check supply pressure. It should be a constant 25 psig for 3-15 psi units and 35 psig for 3-27 and 6-30 psi units.
2. Make certain that tubing connections are tight.
3. Check start point and span as previously outlined.
4. Check to see if wire screen (30) is obstructed.
5. If disassembly of transducer is necessary, it is recommended it be done in a clean area. Should foreign particles become lodged between coil and magnet assembly, a malfunction may occur. Do not attempt to remove magnet housing subassembly (11) as this will destroy the calibration of the nozzle and balance beam relationship.
6. If the maximum specified output pressure cannot be obtained, verify the supply pressure using an alternate gauge. Also, verify the input current using a digital ammeter. Some field calibrators may not be capable of supplying sufficient current to the high impedance units.

### ELECTRICAL

1. Is it the proper 1-5, 0-20, 4-20 or 10-50 mA DC Range?
2. Check to see that input signal leads are connected to proper terminals. (refer to "Electrical Connection" section).
3. Make certain there are no loose wires at terminal or solder connections.
4. Check internal resistance by connecting ohm meter to Terminals No. 1 and No. 2. In making any resistance tests, the input signal wires from controller must be disconnected. Nominal total of unit ohms.

Do not change setting of range adjust potentiometer on printed circuit board while making this test. (If unit does not have nominal input impedance as shown in the table below, the following points should be checked.

| INPUT | IMPEDANCE |
|---|---|
| 1-5mA | 2330 OHMS |
| 0-20mA | 130 OHMS |
| 4-20mA | 145 OHMS |
| 10-50mA | 60 OHMS |

a. A measure of resistance between any terminal of the transducer and the external case should indicate an "open" circuit. If resistance is indicated, voice coil windings or leads to voice coil may be touching case. Further checks must then be made.

b. Remove cap (27) from body. Disconnect signal lead wires to coil by unplugging the circuit board connections. Check nominal resistance of coil from assembly by connecting ohm meter to the coil lead wires. (Resistance of coil should be 150 OHMS for input ranges of 0-20/4-20/10-50mA and 2500 OHMS for an input range of 1-5mA. If resistance is measured between either of the coil leads and external case, the coil windings or leads may be touching external case.

R&C
FOREMOST IN CONTROL ELEMENTS

**CONOFLOW**
**REGULATORS & CONTROLS**
Division of ITT Grinnell Valve Co., Inc.
*P.O. Box 768*
*St. George, S. C. 29477*
*(803) 563-9281 TELEX 805062*

Control Software Listing

```
45410  !
20  !            TEMPERATURE MONITORING
30  !                      AND
40  !            CONTROL PROGRAM
50  !
60  !           WRITTEN BY EDNA CARPENTER AND
70  !           HANS J. HANSEN
80  !
81  !      THIS PROGRAM RUNS  A TEMPERATURE CONTROL
82  !         PROGRAM IN THE BACKGROUND TAKING
83  !         TEMPERATURE READINGS EVERY DELTAT SECONDS
84  !         AND PLOTTING ON THE CRT SCREEN EVERY
85  !         DELPLOT1 MINUTES.
86  !
87  !        ALL OTHER FUNCTION TAKE PLACE BETWEEN
88  !          READINGS.  AFTER A READING PROGRAM
89  !          WILL RETURN TO WHERE IT WAS INTERRUPTED.
90  !
91  !
93  !      THE DATA MAY ALSO BE PLOTTED ON A PLOTTER
94  !          FOR A PERMENANT RECORD.
95  !      THE CONTROL VARIABLES MAY BE CHANGED WHILE
96  !          THE PROGRAM IS RUNNING.
97  !
98  !
99  !     ACTUAL TEMPERATURE CONTROL
100 !     UTILIZES 2  P & I LOOPS IN CASCADE AND
101 !      USES 9 INPUT CHANNELS
110 !
120 !      EQUIPMENT USED:
121 !         HP9826 COMPUTER
122 !         HP BASIC 2.1
123 !         HP 3421A DATA ACQUISTION AND CONTROL UNIT
125 !         HP7245B PLOTTER
127 !
130 COM /Com_parm/ @Kybd,Clr$[10],INTEGER Cur_parm
135 COM /Tuncon/ Kp1,Ki1,Kp2,Ki2,Kcurrent,Deltat,Reference,INTEGER Start_channel
,End_channel
136 COM /Tuncon1/ Delstore,Da_te$[12],Ti_me$[12],Lowtemp,Uppertemp,Torg1,Tmax1,T
max2,Delplot1,Delp12
137 COM /Tuncon2/ Plotteron,Tt0,Ti_me,Yy0(10),Ij,T4,T2,Ijj,Oldtmax2,Torg,Iertest
139 COM /Da_ta/ Cur_time,Temp(9),Weight(9),Factor(8),T0,Calfactor(9),P1$(9)[3]
140 COM /Intg/ Integral1,Integral2,Output1,Output2,Current,Error1,Error2
141!DIM Stor(10000),Yy0(10),Yy00(10)
142 INTEGER X
144   ASSIGN @Kybd TO 2
145   Clr$=CHR$(255)&"K"     !CLEAR THE KEYBOARD SCR
146    Contr=0
147    Plotteron=0                    !PLOTTER ON
149          OUTPUT @Kybd;Clr$;      !CLEAR SCREEN
150          MASS STORAGE IS ":INTERNAL"
152          PRINTER IS 1         !COMPUTER SCREEN
153 !
154 !      WEIGHTING FACTORS
155 !
156          FOR I=1 TO 8
157          Factor(I)=0           !WEIGHTING FACTRS
158          NEXT I
159 !
160 !        THESE ARE THE INITIAL VALUES OF VARIABLES
```

```
161 !
162          Kp1=2.5           !PROPORTIONAL GAIN
164          Ki1=.01            !INTEGRAL GAIN #1
174          Kp2=-1.0           !PROPORTIONAL ACTION #2
184          Ki2=0.            !INTEGRAL ACTION #2
194          Kcurrent=1.      !VALVE GAIN NOT USED
204          Deltat=1         !TEMPERATURE SAMPLING INTERVAL
205          Delstore=100     !INTERVAL FOR STORING DATA
206          Delplot1=60      !INTERVAL FOR CRT PLOT
207          Delpl2=200        !INTERVAL FOR PLOTTER
208          Bias=74
209          Bias1=63.1
214          Reference=70          !DESIRED ROOM TEMP
215          Start_channel=3       !# OF FIRST CHANNEL
217          End_channel=3         !# OF LAST CHANNEL
218 !
219 !       THE COIL CHANEL IS ALWAYS END_CHANNEL+1
220 !
222!
223 !        YES MEANS CHANNEL WILL BE PLOTTED
224 !         NO NOT PLOTTED EVEN THOUGH TEMPERATURE IS BEING TAKEN
225 !
226          P1$(1)="YES"
227          P1$(2)="YES"
228          FOR I=3 TO 9
229          P1$(I)="NO "
230          NEXT I
231 !
232 !    TEMPERATURE RANGES FOR PLOTTING
233 !
234          Lowtemp=65                 !LOW TEMP FOR PLOTTING
235          Uppertemp=80                !HIGH TEMP FOR PLOTTING
236          Weight(1)=1.                !WEIGHT 1
237          Weight(2)=1.                !WEIGHT 2
238          Ii=1                        !INCREMENT FOR STORING
239          Maxi=10000
240          Integral1=-1631.0            !TEMP COMPUTATION CONSTANT
241          Integral2=0                   !TEMP COMPJUTATION CONSTANT
242          Tmax1=60        !MAXIMUM TIME ON CRT GRAPH(MINUTES)
243          Tmax2=8         ! MAXIMUM TIME ON PLOTTER(HOURS)
244 !
245 !     READ CALIBRATION DATA  NOT IN USE 10/84
246 !
247 !        ASSIGN @Disc TO "CALIBDAT"
248 !        ENTER @Disc;Calfactor(*)
249 !        ASSIGN @Disc TO *   !CLOSE FILE
250 !
251 !
252          OUTPUT 705;"IN;";    ! INITIALIZE PLOTTER
253          DEG                   !ANGLES IN DEGREES
254          OFF KEY               !TURN OFF ALL KEY FUNCTIONS
255 !
256 !      THIS TRANFERS CONTROL TO TUNER SUBROUTINE WHICH ALLOWS CHANGES TO VAR
IABLES
257 !      THERE IS A 10 SECOND DELAY AND IF NO ACTION IS TAKEN THERE IS A AUTOM
ATIC RETURN TO HERE
258 !
259 !
260          CALL Tuner(Contr,1)
261          IF Contr=1 THEN GOTO Call6     !ABORT
```

```
262          OUTPUT @Kybd;Clr$;              !CLEAR KEYBOARD
263          IF Contr=3 THEN CALL Wei_ght(Contr)
265 !
267 ON ERROR GOSUB Errec
268 ON TIMEOUT 7,10 GOTO Start
269 !
271 !      RESET THE 3421A
272 !
274          OUTPUT 709;"RS"
275           OFF KEY
276!
278!        IF OPERATOR NOT PRESENT TO INPUT TIME AND DATE PROCEED ANYWAY
279 !
280           ON DELAY 10 GOTO Xx1
281          GOTO Start
282 !
283 !
284 Xxx:     DISP "ENTER DATE--EXAMPLE(10 NOV 1983)";
285          INPUT Da_te$
286          OFF DELAY
287          DISP "ENTER TIME--EXAMPLE(10:37:30)";
288          INPUT Ti_me$
289          SET TIMEDATE DATE(Da_te$)+TIME(Ti_me$)
290          RETURN
291 Start:!
292          OFF DELAY
293 Xx1:     ON KEY 0 LABEL "TUNE",14 GOTO Tune
294          ON KEY 1 LABEL "PLOTTER",15 GOSUB Pltcont
295          ON KEY 2 LABEL "WEIGHT",14 GOTO Weight_adj
296          ON KEY 4 LABEL "RUN",15 GOTO Ru_n
297          ON KEY 5 LABEL "RESET",14 GOSUB Reset_integral
298          ON KEY 6 LABEL "STOP",14 GOTO Stp
299          ON KEY 7 LABEL "PLOT ",14 GOSUB Plt
300          ON KEY 8 LABEL "VALUES",14 GOSUB Ret
301          ON KEY 9 LABEL "ABORT",15 GOTO Call6
302          OFF TIMEOUT
303          T0=TIMEDATE       !INITIAL TIME
304          T4=T0             !STARTING TIME FOR CRT PLOT
305          T5=T0             !STARTING TIME FOR PLOTTER PLOT
306 !
307 !      THIS SETS UP GRAPHS FOR BOTH CRT AND PLOTTER
308 !               WITH ARGUMENT OF 0
310 !
311          CALL Graph(0)
312          Torg1=0        !  0 TIME FOR CRT IN MINUTES
313                         | THIS IS DIFFERENCE IN TIME FROM T0
314          Ij=1            | COUNT FOR LABELING CRT PLOT
315          Tt0=0          |   PREVIOUS TIME FOR PLOTTING
316          ON TIMEOUT 7,10 GOTO Aa2
317         OUTPUT 709;"LP1-9;";
318 Aa2:     OFF TIMEOUT
319 !
320 !     GET INITIAL TEMPERATURES FOR ALL 9 CHANNELS
321 !
322          CALL Gettemp
323          FOR I=1 TO 9
324          Yy0(I)=Temp(I)    !ARRAY FOR PREVIOUS TEMPERATURES
325          NEXT I
326 Beg:     OUTPUT @Kybd;Clr$;          !CLEAR KEYBOARD
327          Iertest=0
```

```
329          CONTROL 1;1,1
330          PRINT TAB(15),"TEMPERATURE CONTROLLER"
331          DISP "TO ADJUST REFERENCE TEMPERATURE TURN KNOB"
332          ON KNOB .1,14 CALL Set_point
333 Sta:     !
334         ON TIMEOUT 7,10 GOTO Aa3
335 !
336 !   SETS UP CHANNELS FOR 3421A
337 !
338         OUTPUT 709;"LP";Start_channel;"-";End_channel+1;";"
339         GOSUB Prt
340 !xxxxxxxxxxxxxxxxxxxxxxxxxXXXXXXXXXXXXXXXXXX
341 !
342 ! THIS COMMAND CAUSES THE PROGRAM TO TO TAKE TEMPS READINGS AND ADJUSTMENTS
EVERY DELTAT SECONDS
343 !
344 Aa3:     ON CYCLE Deltat,13 CALL Gettemp
345 !
346 !XXXXXXXXXXXXXXXXXXXXXXXXXXXXXXXXXXXXXXXXXXXX
347 !
348 !        THIS LOOP OPERATES IN BETWEEN DELTAT TIME READINGS OF TEMPERATURE
349 !
350 !    THE LOOP IS INTERRUPTED EVERY DELTAT SECS TO PROCESS ALL COMMANDS IN
351 !     SUBROUTINE GETTEMP
352 !         THE SUBROUTINE TAKES TEMPERATUES AND PLOTS DATA ON CRT SCREEN
354 !       THE PROGRAM IS THEN CONTINUED WHERE EVER IT LEFT OFF
355 !
356 !XXXXXXXXXXXXXXXXXXXXXXXXXXXXXXXXXXXXXXXXXXXX
357 !
358 Dwell:       LOOP
359 Printout:    !
360 !       THERE IS NO STORING OF VARIABLES AT THIS TIME
361 !
362 !            IF T2-T3>Delstore THEN GOSUB Sto
363              IF (T2-T5>Delpl2) AND (Plotteron=0) THEN GOSUB Plot2     !PLOTTE
R
364 !            DISABLE   THE KEYBOARD AND KNOB
365 !
366             CONTROL 2,7;1
367 !
368 !          SET THE CO-ORDINATES OF THE CRT SCREEN
369              CONTROL 1;5,3
370           PRINT USING Fmt3;Reference
371 Fmt3:    IMAGE "REFERENCE",5X,DD.DD,2X,"DEG.F       "
372          PRINT USING "4X,""ROOM="",1X,DDD.DD,1X,""DEG.F""";Temp(End_channel)
374           PRINT USING "4X,""COIL="",1X,DDD.DD,1X,""DEG.F""";Temp(End_channel+
1)
375           PRINT USING "4X,""ELASPED TIME ="",DDD.DDE,1X,""SEC""";Ti_me
376           CONTROL 1;5,7
377           PRINT USING "4X,""KP1="",DD.DDDE,5X,""KI2="",DD.DDDE";Kp1,Ki1
378           PRINT USING "4X,""E1= "",SDD.DDDE,5X,""I1="",SDD.DDDE";Error1,Integ
ral1
379           PRINT USING "4X,""O1= "",SDD.DDDE";Output1
380           PRINT USING "4X,""E2= "",SDD.DDDE,5X,""I2="",SDD.DDDE";Error2,Integ
ral2
381           PRINT USING "4X,""O2="",SDD.DDE";Output2
382 !         PRINT USING "4X,""KCURRENT="",SDDD.DDE";Kcurrent
383           PRINT USING "4X,""VALVE NUMBER="",DDDD";INT(Current)
384!          ENABLE  THEN KEYBOARD AND KNOB
385           CONTROL 2,7;0
```

```
386          END LOOP
387!
388 !XXXXXXXXXXXXXXXXXXXXXXXXXXXXXXXXXXXXXXXXXXXXXX
389 !
390 !    PLOTTER CONTROL MESSAGE
391  !        PLOTTERON=0   PLOT
392  !        PLOTTERON=1   NO PLOT ON PLOTTER
393 !
394 Prt:     CONTROL 1;5,16
395          IF Plotteron=0 THEN
396          PRINT "DATA WILL BE PLOTTED ON PLOTTER    "
397          ELSE
398          PRINT "DATA WILL NOT BE PLOTTED ON PLOTTER"
399          END IF
400          RETURN
401 !
402 !    TURN ON GRAPHICS    PLOT KEY
403 !          VIEW CRT GRAPH
404 !           THIS GRAPH IS ALWAYS UPDATED EVEN THOUGH IT IS NOT VISIBLE
406 !
407 Plt: !
408            GRAPHICS ON
409            ALPHA OFF
410            RETURN
411 !
412 !       TURN OFF GRAPHICS AND GO TO PRINTOUT OF VALUES     VALUE KEY
413 !
414 Ret:       GRAPHICS OFF
415            ALPHA ON
416            RETURN
417 !
418 !     PLOTTER CONTROL KEY
419 !
420 Pltcont:   IF Plotteron=0 THEN
421            Oldtmax2=Tmax2
422            Tmax2=0
423            Plotteron=1
424            ELSE
425            Plotteron=0
426            END IF
427            GOSUB Prt
428            RETURN
429 !
430 !        CHANGE INPUT VARIABLES
431 !
432 Tune:    !
433         CONTROL 2,7;0
434         CALL Tuner(Contr,2)
435         IF Contr=1 THEN GOTO Call6
436         IF Contr=3 THEN GOTO Weight_adj
437         GOTO Beg
438  !
439  !      ERROR CONTROL SECTION
440  !
441 Errec:     IF ERRN=401 THEN GOTO Xxx
442            IF ERRN=900 THEN RETURN  !UNDEFINED KEY
443            PRINT "ERROR NUMBER =";ERRN
444            PAUSE
445            GOTO Sta
446 !
```

```
447 !     ADJUST WEIGHTS
448 !
449 Weight_adj:    !
450                CONTROL 2,7;0
451                CALL Wei_ght(Contr)
452                IF Contr=1 THEN GOTO Call6
453                GOTO Beg
454 !
455 !      THIS TEMPORARILY STOPS THE PROGRAM
456 !      THE PROGRAM CAN BE RESTARTED BY HITTING START
457 !
458 Stp:            OFF CYCLE
459                 CONTROL 2,7;0
460 Dwell1:       LOOP
461               END LOOP
462 !
463 !       THIS RESTARTS PROGRAM AFTER TEMPORARY STOP
464 !
465 Ru_n:          ON CYCLE Deltat,13 CALL Gettemp
466                 GOTO Dwell
467!
468 !     THIS IS CODING FOR STORING VARIABLES
469 !      IT HAS NOT BEEN CHECKED OUT
470 !
471 Sto:           Stor(Ii)=TIMEDATE
472!*
473                T3=T2
474                Ii=Ii+1
475                I=Start_channel
476                FOR J=1 TO 9
477                IF J=I THEN
478                Stor(Ii)=Temp(I)
479                Ii=Ii+1
480                I=I+1
481                IF I>End_channel THEN
482                I=20
483                GOTO Aa
484                END IF
485                ELSE
486                Stor(Ii)=0
487                Ii=Ii+1
488                END IF
489 Aa:            Stor(Ii)=Temp(End_channel+1)
490                Ii=Ii+1
491                IF Ii>Maxi THEN
492                Ii=1
493                END IF
494                NEXT J
495                RETURN
496 !
497 !    THIS CODING IS FOR PLOTTING ON A PRINTER
498 !
537 !     PLOTTING ON PLOTTER   DEVICE 705
538 !
539 Plot2:         Ttil=Ti_me/3600-Torg
540                IF Ttil>Tmax2 THEN
541                OUTPUT 705;"PG1;"   !PAGE RESTORE
542                OFF TIMEOUT
543                Torg=Torg+Tmax2
544                CONTROL 2,7;1
```

```
545                 CALL Graph(2)      !   NEW GRAPH
546                 CONTROL 2,7;0
547                 Tt11=Ti_me/3600-Torg
548                 END IF
549                 T5=T2
553                 FOR I=Start_channel TO End_channel+1
554                 IF Pl$(I)="NO " THEN GOTO Nexi1
555                 Yy=Temp(I)
556!
557 !       PLOT ONE SET  OF POINTS ON PLOTTER
558 !
560!                OUTPUT 705;"PU;PA";Tt00;",";Yy00(I);";PD;PA";Tt11;",";Yy;";PU;
"
561 !
562 !     PLOT TEMPERATURE VS TIME BY PRINTING VARIABLE I ON PLOTTER
563 !
564                 IF Yy>Uppertemp THEN Yy=Uppertemp
565                 IF Yy<Lowtemp THEN Yy=Lowtemp
566                 DISABLE
567                 OUTPUT 705;"PU;PA";Tt11;",";Yy;";PD;LB";I;CHR$(3)
568                 ENABLE
569 Nexi1:          NEXT I
570                 RETURN
571 !
572 !     RESET INTEGRALS TO 0    KEY CONTROL
573 !
574 Reset_integral:    Integral1=-1631.0
575                    Integral2=0
576                    RETURN
577 !
578 !         ABORT PROGRAM
579 !
580 Call6:       OFF CYCLE
581                 OUTPUT @Kybd;Clr$;
582                 CONTROL 2,7;0
583                 PRINT TAB(14);"ALL DONE"
584                 PRINT TAB(10);"PRESS RUN TO RESTART"
585                 OFF KEY
586                 GRAPHICS OFF
587                 END
588 !
589 !
590 !
591 !       THIS SUBROUTINE ALLOWS FOR CHANGING VARIABLES WHILE
592 !       TEMPERATURE READING IS CONTINUING IN THE
593 !        BACKGROUND.
594 !
595 !
596 !
597 SUB Tuner(Contr,Ix)
598 COM /Com_parm/ @Kybd,Clr$[10],INTEGER Cur_parm
599 COM /Tuncon/ Kp1,Ki1,Kp2,Ki2,Kcurrent,Deltat,Reference,INTEGER Start_channel
,End_channel
600 COM /Tuncon1/ Delstore,Da_te$,Ti_me$,Lowtemp,Uppertemp,Torg1,Tmax,Maxtime,De
lplot1,Delplot2
601 COM /Tuncon2/ Plotteron,Tt0,Ti_me,Yy0(10),Ij,T4,T2,Ijj,Oldtmax2,Torg,Iertest
602 COM /Da_ta/ Cur_time,Temp(9),Weight(9),Factor(8),T0,Calfactor(9),Pl$(9)[3]
603 ON DELAY 10 GOTO Off_s
604 IF Ix=2 THEN OFF DELAY
605 Contr=0
```

```
606 OFF ERROR
607        GRAPHICS OFF
608        ALPHA ON
609 Begl:  OUTPUT @Kybd;Clr$;          !CLEAR SCREEN
610          CONTROL 1;1,1
611 PRINT TAB(17),"TUNING ADJUSTMENTS"
612 GOSUB Prt   !PLOTTER CONTROL MESSAGE
613 CONTROL 1;5,3
614 PRINT TAB(14),"PROPORTIONAL GAIN        =";Kp1
615 PRINT TAB(14),"INTEGRAL GAIN #1         =";Ki1
616 PRINT TAB(14),"PROPORTIONAL ACTION #2   =";Kp2
617 PRINT TAB(14),"INTEGRAL ACTION #2       =";Ki2
618 PRINT TAB(14),"VALVE GAIN               =";Kcurrent
619 PRINT USING "13X,""SAMPLING INTERVAL        ="",DD.D,""SEC""";Deltat
620 PRINT USING "13X,""PLOT INTERVAL ON CRT     ="",DDD.D,""SEC""";Delplot1
621 PRINT USING "13X,""PLOT INTERVAL ON PLOTTER="",DDD.DD,""SEC""";Delplot2
622 PRINT TAB(14),"START CHANNEL            =";Start_channel
623 PRINT TAB(14),"END CHANNEL              =";End_channel
624 Da_te$=DATE$(TIMEDATE)
625 Ti_me$=TIME$(TIMEDATE)
626 PRINT TAB(14),"DATE                     =";Da_te$
627 PRINT TAB(14),"TIME                     =";Ti_me$
628 PRINT TAB(14),"LOWER PLOT TEMP          =";Lowtemp
629 PRINT TAB(14),"UPPER PLOT TEMP          =";Uppertemp
630 PRINT TAB(14),"TIME/PLOT(PLOTTER)       =";Maxtime;"HOURS"
631 PRINT TAB(14),"TIME/PLOT(CRT)           =";Tmax;"MINUTES"
632 Newkp1=Kp1
633 Newki1=Ki1
634 Newkp2=Kp2
635 Newki2=Ki2
636 Newkcurrent=Kcurrent
637 Neuppertemp=Uppertemp
638 Nelowtemp=Lowtemp
639 Newdeltat=Deltat
640 Newtmax=Tmax
641 Nestart_channel=Start_channel
642 Neend_channel=End_channel
643 Tune=0
644 OFF KEY
645 ON ERROR GOTO Esr
646 ON KEY 1 LABEL "PLOTTER" GOTO Pltcontrol
647 ON KEY 2 LABEL "RETURN" GOTO Off_s
648 ON KEY 3 LABEL "WEIGHT " GOTO Sta
649 ON KEY 5 LABEL "SELECT" GOTO Inp_parm
650 ON KEY 6 LABEL "        " GOTO Dwell
651 ON KEY 7 LABEL "START" GOTO Off_s
652 ON KEY 8 LABEL "       " GOTO Dwell
653 ON KEY 9 LABEL "ABORT" GOTO Setoff
654!
655 !
656 Lab_ell:CALL Insert(3)        !INSERT ARROW ON SCREEN
657 ON KNOB .1,13 GOTO Scrll      !KNOB CONTROL
658 !
659 Dwell:LOOP
660 !
661        END LOOP
703 Scrll: CALL Scroll(3,18)
704        OFF DELAY
706        GOTO Dwell
708 !
```

```
709 !
710 !        PLOTTER CONTROL KEY
711 !
712 !
714 Pltcontrol: !
715              OFF DELAY
716              IF Plotteron=0 THEN
717              Oldtmax2=Maxtime
718              Maxtime=0
719              Plotteron=1
720              ELSE
721              Plotteron=0
722              END IF
723              GOSUB Prt
724              GOTO Dwell
725 !
726 !
727 !         PRINT PLOTTER CONTROL MESSAGE
728 !
729 !
731 Prt:         CONTROL 1;1,2
732              IF Plotteron=1 THEN PRINT TAB(5),"DATA WILL NOT BE PLOTTED ON PL
OTTER"
733              IF Plotteron=0 THEN PRINT TAB(5),"DATA WILL BE PLOTTED ON PLOTTE
R     "
734              RETURN
735         !
736         !SELECT OPTION
737         !     CUR_PARM IS POSITION OF ARROW ON SCREEN
738         !
740         !
741 Inp_parm:DISP "ENTER NEW INPUT PARAMETER";
742           OFF DELAY
743          INPUT Resp$
744          CONTROL 1;39,Cur_parm
745          PRINT "        ";
746          CONTROL 1;40,Cur_parm
747          SELECT (Cur_parm-2)
748  CASE 1
749          Newkp1=VAL(Resp$)
750          PRINT USING "K";Newkp1
751  CASE 2
752          Newki1=VAL(Resp$)
753          PRINT USING "K";Newki1
754  CASE 3
755          Newkp2=VAL(Resp$)
756          PRINT USING "K";Newkp2
757  CASE 4
758          Newki2=1*VAL(Resp$)
759          PRINT USING "K";Newki2
760  CASE 5
761          Newkcurrent=1*VAL(Resp$)
762          PRINT USING "K";Newkcurrent
763  CASE 6
764          Newdeltat=VAL(Resp$)
765          PRINT USING "K";Newdeltat;"SEC"
766 CASE 7
767          Delplot1=VAL(Resp$)
768          PRINT USING "K";Delplot1;"SEC"
769 CASE 8
```

```
770          Delplot2=VAL(Resp$)
771          PRINT USING "K";Delplot2;"SEC"
772   CASE 9
773          Nestart_channel=VAL(Resp$)
774          PRINT USING "K";Nestart_channel
775   CASE 10
776          Neend_channel=VAL(Resp$)
777          PRINT USING "K";Neend_channel
778   CASE 11
779          Da_te$=Resp$
780          Tune=1
781          OFF CYCLE
782          SET TIMEDATE DATE(Da_te$)+TIME(Ti_me$)
783          T0=TIMEDATE
784          PRINT USING "K";Da_te$
785   CASE 12
786          Ti_me$=Resp$
787          Tune=1
788          OFF CYCLE
789          SET TIMEDATE DATE(Da_te$)+TIME(Ti_me$)
790          T0=TIMEDATE
791          PRINT USING "K";Ti_me$
792   CASE 13
793          Nelowtemp=VAL(Resp$)
794          PRINT USING "K";Nelowtemp
795   CASE 14
796          Neuppertemp=VAL(Resp$)
797          PRINT USING "K";Neuppertemp
798   CASE 15
799           Maxtime=VAL(Resp$)
800           PRINT USING "K";Maxtime;"HOURS"
801   CASE 16
802           Newtmax=VAL(Resp$)
803           PRINT USING "K";Newtmax;"MINUTES"
804   END SELECT
805   GOTO Dwell
806 Esr:  IF ERRN=120 THEN GOTO Dispe
807       IF ERRN=900 THEN RETURN
808       DISP CHR$(13);"ERROR IN TUNER SUBROUTINE"
809       PAUSE
810       RETURN
811 Dispe:  DISP CHR$(13);"YOU MUST HIT SELECT KEY BEFORE ENTERING DATA"
812         BEEP
813         GOTO Dwell
814 Sta:  Contr=3
815       GOTO Off_s
816 Setoff:          Contr=1
913 Off_s:           DISP CHR$(13);"          ";
914                  Icontset=1
915                  OFF KEY
919                  OFF KNOB
921                  Kp1=Newkp1
922                  Ki1=Newki1
923                  Kp2=Newkp2
924                  Ki2=Newki2
925                  Kcurrent=Newkcurrent
926                  Deltat=Newdeltat
927                  IF Ix=1 THEN GOTO Aa
928                  IF (Nestart_channel<>Start_channel) OR (Neend_channel<>End_
channel) THEN
```

```
929                     OFF CYCLE
931                     OUTPUT 709;"LP";Nestart_channel;"-";Neend_channel+1;";"
932                     END IF
933!
934 !
935 !          IF ANY OF THESE VARIABLES CHANGE THEN A NEW GRAPH IS DRAWN ON CRT
936 !
937 !
939        IF (Neuppertemp<>Uppertemp) OR (Nelowtemp<>Lowtemp) OR (Tune=1) OR (Ne
wtmax<>Tmax) THEN
940                     Uppertemp=Neuppertemp
941                     Lowtemp=Nelowtemp
942                     Tmax=Newtmax
943                     CALL Graph(1)
944                     Tt0=0
945                     Torg1=(TIMEDATE-T0)/60
946                     END IF
947                     IF Tune>0 THEN
948                     Oldtmax2=Maxtime
949                     Maxtime=0
950                     END IF
951 Aa:                 Start_channel=Nestart_channel
952                     Uppertemp=Neuppertemp
953                     Lowtemp=Nelowtemp
954                     Tmax=Newtmax
955                     Weight(Neend_channel+1)=Weight(End_channel+1)
956                     End_channel=Neend_channel
957                     IF (End_channel-Start_channel>2) AND (Deltat<1.3) THEN Delt
at=1.3
958                     IF (End_channel-Start_channel>6) AND (Deltat<1.5) THEN Delt
at=1.5
959                     J=1
960                     FOR I=Start_channel TO End_channel+1
961                     P1$(I)="YES"
962                     IF (J>3) AND (I<End_channel+1) THEN P1$(I)="NO "
963                     J=J+1
964                     NEXT I
965                SUBEND
966 !              !
967 !
968 !
969 !   THIS SUBROUTINE CONTROLS MOVING OF ARROW ON MENUS
970 !   THE ARGUMENTS ARE STARTING LINE(STANG) AND END LINE(ENDANG)
971 !
972 !
973 !
1614 SUB Scroll(Stang,Endang)
1615 !
1616 !        THIS CONTROLS MOVING THE ARROW ON THE INPUT SCREENS WITH THE ROUND
KNOB
1617 !
1619 COM /Com_parm/ @Kybd,Clr$[10],INTEGER Cur_parm
1620 CALL Del_cur(Cur_parm)
1621      IF KNOBX>0 THEN
1622      IF Cur_parm=Endang THEN
1623      Cur_parm=Stang
1624      ELSE
1625      Cur_parm=Cur_parm+1
1626      END IF
1627      ELSE
```

```
1628      IF Cur_parm=Stang THEN
1629         Cur_parm=Endang
1630         ELSE
1631         Cur_parm=Cur_parm-1
1632         END IF
1633         END IF
1634         CALL Insert(Cur_parm)
1635         SUBEND
1636  !
1637  !       INSERT ARROW INTO MENU
1638  !
1639 SUB Insert(INTEGER Line_no)   !INSERT ARROW AT CUR_PARM
1640 COM /Com_parm/ @Kybd,Clr$[10],INTEGER Cur_parm
1641       Cur_parm=Line_no
1642        CONTROL 1;11,Line_no
1643        PRINT "-->";
1644        SUBEND
1645!
1646 !      DELETE ARROW
1647 !
1648 SUB Del_cur(INTEGER Cur_parm)  !DELETE ARROW AT CUR_PARM
1649        CONTROL 1;11,Cur_parm
1650        PRINT "   ";
1651        SUBEND
1652!
1653 !
1654 !     THIS SUBROUTINE ALLOWS KNOB TO CONTROL
1655 !         REFERENCE TEMPERATURE
1656 !
1657 !
1659        SUB Set_point
1661        COM /Tuncon/ Kp1,Ki1,Kp2,Ki2,Kcurrent,Deltat,Reference,INTEGER Start_
channel,End_channel
1671        Reference=Reference+KNOBX/50
1681        IF Reference<60 THEN Reference=60
1691        IF Reference>85 THEN Reference=85
1693        PRINT TABXY(18,3),Reference
1701        SUBEND
1702 !
1703 !
1704 !
1706 !      THIS SUBROUTINE ALLOWS FOR ADJUSTMENTS IN WEIGHTING FACTORS
1707 !
1708 !
1710 !
1711        SUB Wei_ght(Contr)
1712        COM /Com_parm/ @Kybd,Clr$,INTEGER Cur_parm
1713        COM /Tuncon/ Kp1,Ki1,Kp2,Ki2,Kcurrent,Deltat,Reference,INTEGER Start_
channel,End_channel
1715        COM /Da_ta/ Cur_time,Temp(9),Weight(9),Factor(8),T0,Calfactor(9),P1$(
9)[3]
1716!        ON DELAY 10 GOTO Off_s
1718        OFF KNOB
1719        OFF KEY
1720        GRAPHICS OFF
1721        ALPHA ON
1722        OUTPUT @Kybd;Clr$;
1723        CONTROL 1;1,1
1724        PRINT TAB(17),"WEIGHT ADJUSTMENTS"
1725        CONTROL 1;10,3
```

```
1726        PRINT TAB(10),"LOCATION          WEIGHT          PLOT"
1727        FOR I=Start_channel TO End_channel
1728        PRINT USING "13X,DD,12X,D.DD,12X,3A";I,Weight(I),Pl$(I)
1729        NEXT I
1730        PRINT USING "13X,""COIL"",10X,D.DD,12X,3A";Weight(End_channel+1),Pl$(
End_channel+1)
1731        CONTROL 1;10,17
1732        PRINT "ONLY 4 CHANNELS MAY BE PLOTTED - ENTER 0 OR NEGATIVE TO TURN O
FF"
1733        ON KEY 2 LABEL "RETURN" GOTO Off_s
1734        ON KEY 5 LABEL "SELECT" GOTO Inp_parm
1735        ON KEY 6 LABEL "        " GOTO Dwell
1736        ON KEY 7 LABEL "START   " GOTO Off_s
1737        ON KEY 8 LABEL "        " GOTO Dwell
1738        ON KEY 9 LABEL "ABORT" GOTO Setoff
1739 Lab_ell:       CALL Insert(4)   ! PUT ARROW ON SCREEN
1740                Endc=4+End_channel-Start_channel+1
1741                ON KNOB .1 GOTO Scrll   !KNOB CONTROL
1742 Dwell:                LOOP
1743                       END LOOP
1745 Scrll:    CALL Scroll(4,Endc)  !KNOB HAS BEEN TURNED
1747           GOTO Dwell
1748 Inp_parm:  DISP "ENTER NEW WEIGHT";
1749            INPUT Resp$
1750            CONTROL 1;28,Cur_parm
1751            PRINT "                "
1752            CONTROL 1;28,Cur_parm
1753            Ii=Cur_parm-3
1754            Aa=VAL(Resp$)
1755            IF Aa<=0 THEN
1756            Pl$(Ii)="NO "
1758            ELSE
1759            Pl$(Ii)="YES"
1760            END IF
1761            Weight(Ii)=ABS(Aa)
1762            PRINT USING "D.DD,12X,3A";Weight(Ii);Pl$(Ii)
1763            GOTO Dwell
1764 Setoff:   Contr=1
1765 Off_s:    Total_weight=0
1766           OFF DELAY
1768           FOR I=Start_channel TO End_channel
1769           Total_weight=Total_weight+Weight(I)
1770           NEXT I
1771           IF Total_weight=0 THEN GOTO En_d
1772           FOR I=Start_channel TO End_channel
1773           Factor(I)=Weight(I)/Total_weight
1774           NEXT I
1775 En_d: !
1776        SUBEND
1777 !
1778 !
1779 !
1780 !       THIS SUBROUTINE IS ENTERED EVERY DELTAT SECONDS
1781 !       AND IS THE BACKGROUND PROGRAM
1782 !       IT RUNS WHILE EVERY THING ELSE RUNS BETWEEN
1783 !
1785 !       THE SUBROUTINE TAKE TEMPERATURES
1786 !       AND COMPUTE CONTROL INPUT
1787 !
1788 !
```

```
1789 !
1791        SUB Gettemp
1792        COM /Tuncon/ Kp1,Ki1,Kp2,Ki2,Kcurrent,Deltat,Reference,INTEGER Start_
channel,End_channel
1793        COM /Da_ta/ Cur_time,Temp(9),Weight(9),Factor(8),T0,Calfactor(9),P1$(
9)[3]
1794   COM /Tuncon1/ Delstore,Da_te$[12],Ti_me$[12],Lowtemp,Uppertemp,Torg1,Tmax
1,Tmax2,Delplot1,Dep
1795        COM /Tuncon2/ Plotteron,Tt0,Ti_me,Yy0(10),Ij,T4,T2,Ijj,Oldtmax2,Torg,
Iertest
1796        COM /Intg/ Integral1,Integral2,Output1,Output2,Current,Error1,Error2
1797        Probeave=0
1798        ON TIMEOUT 7,.5 GOTO Err_or
1799        OUTPUT 709;"F4RA1Z0N3T3"
1800        Ierr=0
1801        OFF TIMEOUT
1803         FOR I=Start_channel TO End_channel+1
1804         ENTER 709;Resistance(I)
1805         IF Resistance(I)<0 OR Resistance(I)>10000 THEN
1806         Ierr=1
1807         ELSE
1809         Temp(I)=(EXP((Resistance(I)-11883.9)/(-2531.1))+32)
1810         END IF
1812         IF I=End_channel+1 THEN
1813         Tempend=Temp(I)*Weight(End_channel+1)
1814         ELSE
1815         Probeave=Probeave+Weight(I)*Temp(I)
1816         END IF
1817         NEXT I
1818 !
1819 !          PERFORM PID CALCULATIONS
1820 !
1821 !               OUTER LOOP
1822 !
1823        Error1=Reference-Probeave
1826        Integral1=Integral1+Error1*Deltat
1827        Output1=Kp1*(Error1+(Ki1*Integral1))+Bias1
1828!
1829 !              INNER LOOP
1830 !
1831        Error2=Output1-Tempend
1832        Integral2=Integral2+Error2*Deltat
1833        Output2=Kp2*(Error2+(Ki2*Integral2))+Bias
1834 !
1835 !             MULTIPLY TO MATCH VALVE CURRENT
1836 !
1837        Current=Kcurrent*Output2
1838        T2=TIMEDATE
1839       Ti_me=T2-T0
1840       IF T2-T4>Delplot1 THEN GOSUB Plot1
1841        IF Current>255 THEN Current=255
1842        IF Current<0 THEN Current=0
1843        IF Ijj<>0 THEN DISP "
1844 !
1845 !           ERROR = 0
1846 !
1848        Ijj=0
1849 !
1850 !         THIS COMMAND CONTROLS OUTPUT
1852 !
```

```
1853        OUTPUT 709;"WRT2,"&VAL$(INT(Current))
1854        IF Ierr=1 THEN GOTO Err_or1
1856         SUBEXIT
1857 !
1858 !
1859 !       PLOTS POINTS ON CRT
1860!        THIS IS ALWAYS PLOTING IN  BACKGROUND
1861 !
1862 !
1863 Plot1:           !
1864               T4=T2                    !UPDATE  TIME
1865               Tt1=Ti_me/60-Torg1
1866               FOR I=Start_channel TO End_channel+1
1867                   Yy=Temp(I)
1868                   IF P1$(I)="NO " THEN GOTO Nexi
1869 !
1870 !       IT CANNOT DO ANYTHING ELSE WHILE LINE
1871 !       IS BEING DRAWN
1872 !
1873                   DISABLE
1874                   PLOT Tt0,Yy0(I),-2  !PREVIOUS POINT
1875                   PLOT Tt1,Yy,-1    !  PRESNT POINT
1876                   IF Ij>5 THEN LABEL USING "D";I
1877 Nexi:              Yy0(I)=Yy     !  SAVE OLD TEMP
1878                    NEXT I
1879              Tt0=Tt1        !SAVE OLD TIME
1880              ENABLE
1881              IF Ij>5 THEN Ij=-1
1882              Ij=Ij+1
1883              IF Tt1>Tmax1 THEN
1884  !
1885  !       CRT FULL REDRAW GRAPH
1886  !
1887                 GCLEAR
1888                 CALL Graph(1)
1889                 Ij=1
1890                 Tt0=0
1891                 Torg1=Torg1+Tmax1
1892                 END IF
1893                 RETURN
1894 Err_or: !
1895         Ijj=1
1896        DISP "ERROR IMPROPER TEMPERATURES"
1897        SUBEXIT
1898 Err_or1: !
1899       OFF CYCLE
1900       OUTPUT 709;"RS"
1901       OUTPUT 709;"LP";Start_channel;"-";End_chanel+1;";"
1902       Iertest=Iertest+1
1903       DISP Resistance(1),Resistance(2),"ERRCOUNT=",Iertest
1905       SUBEND
1906 !
1907 !
1908 !       THIS SUBROUTNE DRAWS GRAPH FOR CRT AND PLOTTER
1909 !
1910 !
1911 !
1912         SUB Graph(Ix)
1913 !
1914 !      AN ARGUMENT OF
```

```
1915 !          0   DRAWS TWO GRAPHS
1916 !          1    DRAWS CRT GRAPH ONLY
1917 !          2    DRAWS PLOTTER GRAPH ONLY
1918 !
1919          COM /Tuncon1/ Delstore,Da_te$,Ti_me$,Lowtemp,Uppertemp,Torg1,Tmax1,
Tmax2,Delplot1,Delp1
1920          COM /Tuncon2/ Plotteron,Tt0,Ti_me,Yy0(10),Ij,T4,T2,Ijj,Oldtmax2,Tor
g,Iertest
1921 COM /Da_ta/ Cur_time,Temp(9),Weight(9),Factor(8),T0,Calfactor(9),Pl$(9)[3]
1922          OFF KEY
1923          ON KEY 9 LABEL "ABORT",15 GOTO Offs
1924          IF Ix=2 THEN GOTO Pltprt
1925 !
1926 !        CRT
1927 !
1928          Interval1=(Uppertemp-Lowtemp)/5
1929          Interval2=(Tmax1)/10
1930          ALPHA OFF
1931          GRAPHICS ON
1932          GINIT     !INITIALIZE
1933          VIEWPORT 10,130,20,90
1934          WINDOW 0,Tmax1,Lowtemp,Uppertemp
1935          AXES Interval2,Interval1,0,Lowtemp
1936          CLIP OFF
1937          MOVE 0,Lowtemp
1938          LINE TYPE 1,4
1939          LORG 3
1940          LABEL USING ",20X,7A";"MINUTES"
1944          LABEL USING "10X,"" 0 =="",12A,12A";DATE$(TIMEDATE),TIME$(TIMEDATE)
1951          DEG
1960          LDIR 90
1961          Yy=(Uppertemp-Lowtemp)/2+Lowtemp
1962          LORG 4
1970          MOVE 0,Yy
1980          LABEL "TEMP DEG.F"
1981!          CSIZE 3
1990          LDIR 0
1992          LORG 8
1994          MOVE 0,Lowtemp
1995          LABEL USING "K";Lowtemp
1996          MOVE 0,Uppertemp
1997          LABEL USING "K";Uppertemp
1998          LORG 3
2000          MOVE 0,Lowtemp
2001          LABEL "0"
2002          LORG 9
2003          MOVE Tmax1,Lowtemp
2004          LABEL USING "K";Tmax1
2005          LORG 5
2006          CSIZE 3
2010          GRAPHICS OFF
2011          ALPHA ON
2013          IF Ix=1 THEN SUBEXIT
2014          IF Plotteron=1 THEN SUBEXIT
2015 !
2016 !     THIS CODING IS GRAPH FOR PRINTER AND IS
2017 !      NOT OPERATING AT PRESENT
2018 !
2043 Pltprt:!
2044 !             GRAPH FOR PLOTTER
```

```
2045 !
2046 !
2048 !
2049 !        THIS PUTS THE PLOT ON 1 SHEET OF PAPER
2052         OUTPUT 705;"IP200,200,7500,10200;";
2053 !
2054 !       THIS ASSOCIATES USER VALUES WITH PAPER
2055         Interval1=(Uppertemp-Lowtemp)/10
2056         IF Tmax2=0 THEN Tmax2=Oldtmax2
2058         Interval2=Tmax2/10
2059 !
2060         OUTPUT 705;"SC0,";Tmax2;",";Lowtemp;",";Uppertemp+Interval1;",3;"
2062!
2065 !      THIS DRAWS X AXIS
2066 !
2067 !
2068         OUTPUT 705;"PU;PA0,";Lowtemp;";PD;PA";Tmax2;",";Lowtemp;";PU;SI;"
2071 !
2075 !       LABEL X AXIS
2076 !
2077         L11=Lowtemp-Interval1/8
2078         Midpoint=Tmax2/2
2079         Int1=-Interval2
2081         FOR I=Tmax2 TO 0 STEP Int1
2082         IF I<1.E-3 THEN I=0
2084         OUTPUT 705;"PU;PA";I;",";Lowtemp;";XT;LO5;PU;PA";I;",";L11;";LB";I;
CHR$(3)
2085         NEXT I
2091  !
2092  !        DRAW Y AXIS
2093  !
2094         OUTPUT 705;"PU;PA0,";Lowtemp;";PD;PA0,";Uppertemp;";PU;"
2097 !
2098 !       LABEL Y AXIS
2099 !
2100         L11=0-Interval2/2
2101         FOR I=Lowtemp TO Uppertemp STEP Interval1
2102         OUTPUT 705;"PU;PA0";",";I;";YT;PD;LO8"
2103         OUTPUT 705 USING """LB"",DD.D,1A";I;CHR$(3)
2104         NEXT I
2105!
2107!    LABEL GRAPH
2108!
2109         OUTPUT 705;"PU;PA";Midpoint;",";Uppertemp+Interval1/2;";"
2110         OUTPUT 705;"LBTEMPERATURE VS TIME(HOURS)",CHR$(3)
2111         Dat$=DATE$(TIMEDATE)
2112         Tim$=TIME$(TIMEDATE)
2113         Torg=(TIMEDATE-T0)/3600
2114         OUTPUT 705 USING "10X,""LB     START TIME ="",12A,12A,1A";Dat$;Tim$
;CHR$(3)
2115 Offs:   OUTPUT 705;"SI.1,.1;LO5;PU;"
2116         SUBEXIT
2117         SUBEND
```

## Control Equations

At each sampling interval, calculations are made for both the control of the room air temperature and the supply air temperature. The calculations for the room are done first since the supply air temperature setpoint is provided as the result of the room air calculations.

The first calculation performed is to determine the error in the room temperature (Error1). This is the difference between the room setpoint (Reference) and the average measured room air temperature (Probeave). The equation for the calculation is :

Error1 = Reference-Probeave

This computation is performed in line 1822.

The next computation computes the integral of the error in the room temperature over time (Integral1). The integral is approximated by summing the error and multiplying by the sampling interval (Deltat). The equation for the calculation is :

Integral1 = Integral1 + (Error1 X Deltat)

This computation is performed in line 1826.

The final computation in the room temperature control set is to compute the setpoint for the supply air temperature control equations (Output1). The supply air temperature setpoint is computed using the following equation:

Output1 = Kp1 X (Error1 + (Ki1 X Integral1)) + Bias1

where
- Kp1 = Control parameter for gain of room air temperature control loop
- Ki1 = Control parameter for the amount of integral action in the room temperature control loop
- Bias1= Bias term to be added to the setpoint for the supply air temperature control loop

Once the control calculations for the room air temperature have been performed, the calculations for the supply air temperature control can be performed. The first computation is to compute the error in the supply air temperature (Error2) from the supply air setpoint (Output1) and the measured supply temperature (Tempend). This is done using the following equation:

$$Error2 = Output1 - Tempend$$

This calculation is done in line 1831.

The next calculation performed in the supply temperature control equations is to compute the integral of the error in the supply air temperature. This is done using the same methodology as was used for computing the integral of the room error temperature, using the following equation:

$$Integral2 = Integral2 + (Error2 \times Deltat)$$

This calculation is performed in line 1832.

The final calculation in the supply air control equations is to compute the output to the D/A converter, before the valve gain is applied. This is done using the following equation:

$$Output2 = Kp2 \times (Error2 + (Ki2 \times Integral2)) + Bias$$

where
- Kp2 = Control parameter for proportional gain for supply air temperature control loop
- Ki2 = Control parameter for amount of integral action for supply air temperature control loop
- Bias = Bias Term added to final output before it is sent to the D/A

This calculation is performed in line 1833.

All control calculations are completed after the output of the supply temperature control equations is multiplied by the valve gain (Kcurrent). This is done in line 1837 using the following equation:

$$Current = Kcurrent \times Output2$$

The value of current is what gets transmitted to the D/A converter for positioning the chilled water valve.

Resistance to Temperature Conversion

In the process of controlling temperature, the computer must first compute temperature from corresponding thermistor resistance values. The equation for converting from resistance in ohms to temperature in degrees Fahrenheit is given by the equation below:

$$T = e^{(R - 11883.9)/(-2531.1)} + 32.2$$

where

T = Temperature in Degrees Fahrenheit
R = Resistance of the thermistor in Ohms
e = 2.718281828 (Base for Natural Logarithm)

Quick Start Manual

NC SHOP
COMPUTER BASED
AIR TEMPERATURE CONTROL SYSTEM
QUICK RESTART INSTRUCTIONS/OPERATING TIPS
12 JANUARY 1986

1. DETERMINE THAT THE SYSTEM IS NOT WORKING BY:

   1) REMOVE FOAM FROM FRONT OF INSTRUMENTS MOUNTED BELOW THE COMPUTER

   2) LISTEN FOR AN AUDIBLE CLICKING SOUND. IF THERE IS NO CLICKING SOUND THE COMPUTER HAS STOPPED.

2. HOLD DOWN THE "SHIFT" KEY AND AT THE SAME TIME PRESS THE "PAUSE" KEY. THERE ARE "SHIFT" KEYS LOCATED AT EITHER END OF THE SPACE BAR. THE "PAUSE" KEY IS LOCATED WITH 2 OTHER KEYS IN BETWEEN THE MAIN GROUP OF KEYS AND THE KEYPAD OF NUMERALS ON THE RIGHT.

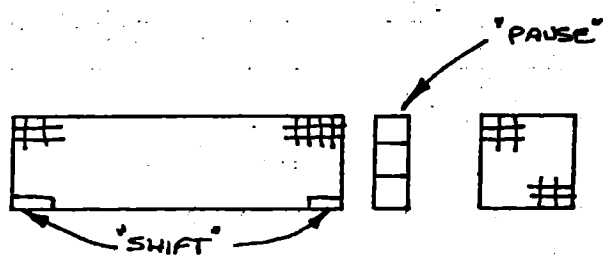


KEYBOARD LAYOUT

3. AFTER STEP 2 HAS BEEN COMPLETED, THE MESSAGE "BASIC RESET" WILL APPEAR AT THE BOTTOM LEFT OF THE COMPUTER SCREEN

4. PRESS "RUN" KEY. IT IS LOCATED JUST BELOW THE "PAUSE" KEY.

5. AFTER PRESSING "RUN", THE SCREEN WILL CLEAR, THE PRINTER WILL ACTIVATE AND THEN THE SCREEN WILL FILL WITH A SELECTION TABLE WITH THE HEADING "TUNING ADJUSTMENTS." THERE WILL BE A PAUSE AT THIS TABLE FOR ABOUT 15 SECONDS.

6. THE SCREEN WILL BE FILLED WITH A GRAPH, THEN THE GRAPH WILL DISAPPEAR AND THE PLOTTER WILL START MAKING A GRAPH.

7. WHEN THE PLOTTER IS DONE, A PAGE OF INFORMATION WILL BE PRINTED ON THE SCREEN WHICH SAYS "TEMPERATURE CONTROLLER" AT THE TOP.

8. THE INSTRUMENTS BELOW THE COMPUTER WILL START CLICKING, INDICATING THAT THE SYSTEM HAS BEEN SUCCESSFULLY RESTARTED.

OPERATING TIPS

THERE ARE 2 DIFFERENT WAYS TO SEE A PLOT OF THE TEMPERATURE IN THE ROOM. ONE WAY IS TO LOOK AT THE GRAPH ON THE PLOTTER. THE OTHER WAY IS TO PLOT THE TEMPERATURE INFORMATION ON THE SCREEN. TO PLOT ON THE SCREEN PRESS THE KEY MARKED "$K_7$" IT IS LOCATED ABOVE THE MAIN GROUP OF KEYS, JUST BELOW THE SCREEN. YOU SHOULD HOLD THE KEY DOWN UNTIL THE SCREEN PLOT APPEARS. TO GET BACK TO THE MAIN SCREEN WHICH SAYS "TEMPERATURE CONTROLLER" AT THE TOP, HOLD DOWN THE "$K_8$" KEY.

IF YOU WISH TO TURN OFF PLOTTING TO THE PLOTTER PRESS THE KEY MARKED "$K_1$" UNTIL THE MESSAGE "DATA WILL NOT BE PLOTTED ON PLOTTER" APPEARS ON THE SCREEN.

IF YOU WISH TO TURN ON PLOTTING TO THE PLOTTER PRESS THE KEY MARKED "$K_1$" UNTIL THE MESSAGE "DATA WILL BE PLOTTED ON THE PLOTTER" APPEARS ON THE SCREEN.

OPERATING TIPS (CONTINUED)

ON ALL TEMPERATURE PLOTS, THE PLOT MARKED WITH THE NUMBER "1" IS FOR THE TEMPERATURE IN THE ROOM. THE PLOT MARKED WITH THE NUMBER "2" IS FOR THE TEMPERATURE OF THE AIR SUPPLIED TO THE ROOM. THE SUPPLY TEMPERATURE IS ALWAYS LOWER THAN THE ROOM TEMPERATURE. A SAMPLE PLOT IS ATTATCHED.

THE ROOM TEMPERATURE SHOULD ALWAYS HAVE AN AVERAGE VALUE OF 70° FAHRENHEIT

IF THE PLOTTER RUNS OUT OF PAPER, THE COMPUTER MAY STOP. IF SO, REPLACE THE PAPER AND GO THROUGH THE RE-START PROCEDURE.

FOR ADDITIONAL HELP PLEASE CALL:

1) BILL FAATZ MACHINE TOOL REPAIR 2-7636

2) HANS HANSEN MACHINE TOOL DEVELOPMENT 3-2428

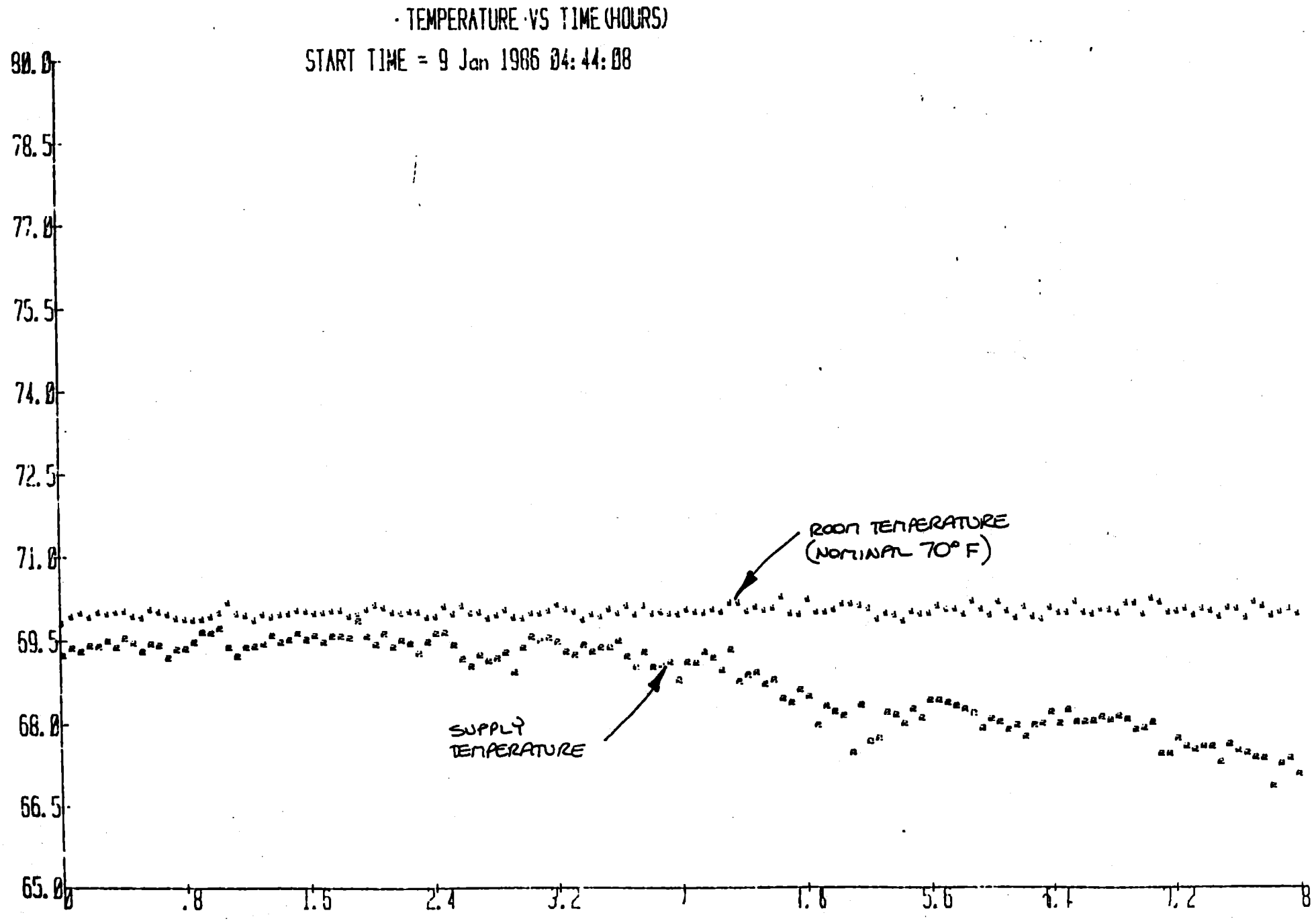
TEMPERATURE VS TIME (HOURS)
START TIME = 9 Jan 1986 04:44:08
80.0
78.5
77.0
75.5
74.0
72.5
71.0
69.5
68.0
66.5
65.0
0
.8
1.6
2.4
3.2
4.0
4.8
5.6
6.4
7.2
8
ROOM TEMPERATURE
(NOMINAL 70° F)
SUPPLY
TEMPERATURE

## Trouble Shooting Guide

Trouble Shooting Guide

The purpose of this section is to describe some troubleshooting techniques to be used for locating problems in the air temperature control system. Usually, a service person is notified when someone notices that the air temperature in the shop is varying more than about 0.5 $^{o}$ Deg. F..

*****Note***** After correcting any problem in the system it is good practice to re-start the control program. This process is described in the "Quick Start Manual"

**Check Sequence**

Is there an audible "clicking" sound coming from the Data Acquisition and control unit in the NC Shop supervisor's offices?

Yes- Make sure air handling unit is on
Make sure chilled water shutoff valves on the roof are both on
Make sure that there are no air leaks in the cooling coil valve diaphragm or in the air lines connecting it to the current to pressure transducer
Make sure the temperature sensors are working properly by testing them with a thermograph.
Make sure that the cooling coil valve stem moves up and down as the valve current changes. This is most easily done by manually changing the valve current with the knob inside the I/O Chassis and having someone observe the action of the valve on the roof.

If the statuses of all of the things above are good, then:

Press the "VALUES" key on the computer keyboard and observe the "VALVE NUMBER" parameter; it should be some number between 0 and 255 and should be slowly varying. As it varies, so should the valve current displayed on the digital display on the I/O Chassis. If the current does not change, check the "Computer/Manual" switch located inside the I/O chassis. It can be reached through the hole in the top of the chassis case. The switch should be in the "COMPUTER" position.

If the current does not start to change with the "VALVE NUMBER", then change the switch back to manual and turn the dial next to the switch several turns. The current should change. If it does not, the problem should be sought out in either the I/O Chassis, the lines between the chassis and the current to pressure transducer or in the transducer itself.

No- Make sure all units are turned on (Computer,Data Acquisition and Control Unit, Plotter I/O Chassis and Disk Drives.

Check the display for error messages. If there are messages, record them and act in response to their meaning and then re-start the control program. If there is no message then just try to re-start the control program.

Make sure that there is enough paper in the plotter and that it is not issuing any errors.