UCRL- 92518
PREPRINT

ION CYCLOTRON RESONANT HEATING (ICRH) SYSTEM USED ON THE TANDEM MIRROR EXPERIMENT UPGRADE (TMX-U)

S. W. Ferguson

This paper was prepared for submittal to
11th Symposium on Fusion
Engineering Proceedings
Austin, Texas
November 18-22, 1985

November 11, 1985

Lawrence Livermore National Laboratory

This is a preprint of a paper intended for publication in a journal or proceedings. Since changes may be made before publication, this preprint is made available with the understanding that it will not be cited or reproduced without the permission of the author.

Unclassified

RECALL

DISCLAIMER

This document was prepared as an account of work sponsored by an agency of the United States Government. Neither the United States Government nor the University of California nor any of their employees, makes any warranty, express or implied, or assumes any legal liability or responsibility for the accuracy, completeness, or usefulness of any information, apparatus, product, or process disclosed, or represents that its use would not infringe privately owned rights. Reference herein to any specific commercial products, process, or service by trade name, trademark, manufacturer, or otherwise, does not necessarily constitute or imply its endorsement, recommendation, or favoring by the United States Government or the University of California. The views and opinions of authors expressed herein do not necessarily state or reflect those of the United States Government or the University of California, and shall not be used for advertising or product endorsement purposes.

ION CYCLOTRON RESONANT HEATING (ICRH) SYSTEM USED ON THE TANDEM MIRROR EXPERIMENT-UPGRADE (TMX-U)

S. W. Ferguson, T. M. Maxwell, D. R. Antelman, D. W. Scofield,
C. A. Brooksby, P. G. Karsner, A. W. Molvik, W. F. Cummins,
S. Falabella, P. Poulsen, J. D. Barter, and G. Dimonte
Lawrence Livermore National Laboratory
P. O. Box 808, L-540
Livermore, CA 94550

Abstract

Ion Cyclotron Resonant Heating (ICRH) is part of the plasma heating system used on the TMX-U experiment. Radio frequency (RF) energy is injected into the TMX-U plasma at a frequency near the fundamental ion resonance (2 to 5 MHz). The RF fields impart high velocities to the ions in a direction perpendicular to the TMX-U magnetic field. Particle collision then converts this perpendicular heating to uniform plasma heating. This paper describes the various aspects of the ICRH system.

Two antennas are used inside the TMX-U vacuum vessel. The antennas are located at each end of the TMX-U central cell. On the west end of the machine two types of loop antenna have been used. On the east end of the machine a slot antenna and more recently a dual half-turn loop antenna has been installed.

RF power for the system is derived from two upgraded military surplus AN/FRT-86(V) transmitters. The transmitters are each capable of producing 200 kW CW and have been recently modified to deliver 400 kW each for 100 msec in class C operation.

The ICRH system has been configured for computer control of the transmitters, and data acquisition system. The entire system is capable of being operated by a single operator.

"Work performed under the auspices of the U.S. Department of Energy by the Lawrence Livermore National Laboratory under contract number W7405-ENG-48."

Introduction

The ICRH system consists of three major elements: the transmitters, the antenna system, and the control/data acquisition system. Figure 1 is a simplified block diagram of the ICRH system showing these major elements. Figure 2 is a perspective drawing showing the layout of the ICRH system. The two AN/FRT-86(V) transmitters are used to drive two separate antennas inside the TMX-U vacuum vessel. Power is delivered to the antennas thru runs of 5-inch heliax coaxial cable. For test purposes either of the two transmitters can be connected to a 225 kW 50 ohm dummy load by means of a coax patch panel. Computer control of the system is provided by a HP9836 computer and a CAMAC serial fiber optic highway. Computer control is provided for transmitter forward power and reflected power. Following each shot the computer receives recorded data detailing transmitter forward and reflected power, antenna impedance both real and imaginary parts, antenna voltage, antenna current, current to the antenna plasma limiter, and much more.

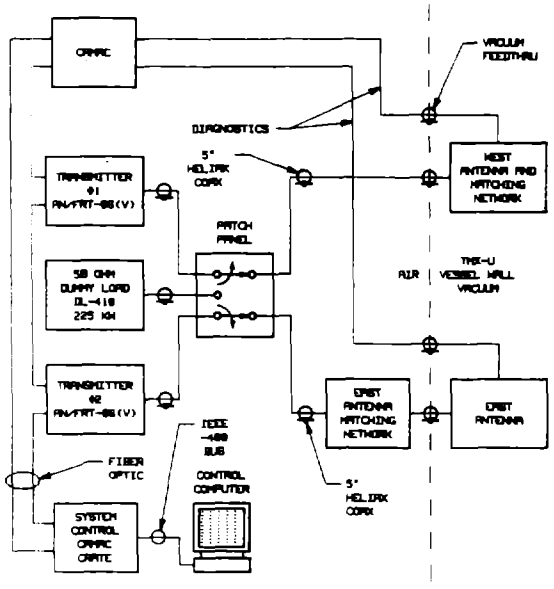

FIGURE 1

ICRH SYSTEM

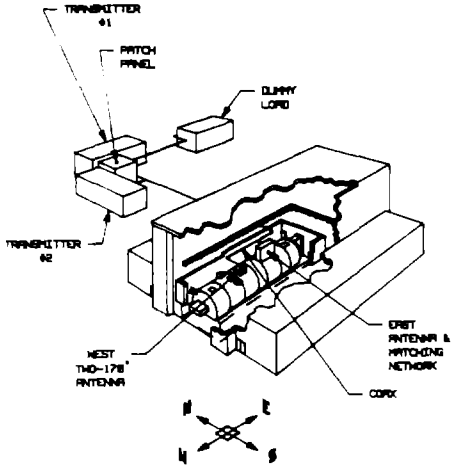

FIGURE 2

ICRH SYSTEM LOCATIONS IN BUILDING 435

Transmitters

The AN/FRT-86(V) transmitters used on the ICRH system are military surplus communications transmitters originally used in class AB operation. They were modified by their manufacturer, Continental Electronics Inc., to supply 200 kW of continuous power in class C operation [Ref. 4]. They have been further modified by LLNL to produce 400 kW in pulsed service for 100 msec. These modifications have to a large extent consisted of converting the inductor and capacitor power supply filters used in the original design to simple capacitor filters that more easily handle the large current surges associated with pulsed RF power. Modifications to transmitter low level drive stages were added to increase the RF drive power

available to the final amplifier grid. To a large extent, these modifications were copied from modifications that Dr. D. Smith had previously implemented on AN/FRT-86(V) transmitters at MIT to increase their output power. The transmitter is normally operated at a load line of approximately 300 ohms for 400 kW output power. Additionally the extensive protection circuitry associated with the transmitters has been modified to accept the additional current loads of higher power operation. Figure 3 is a simplified schematic of the transmitter output network showing some of the modifications for 400 kW operation.

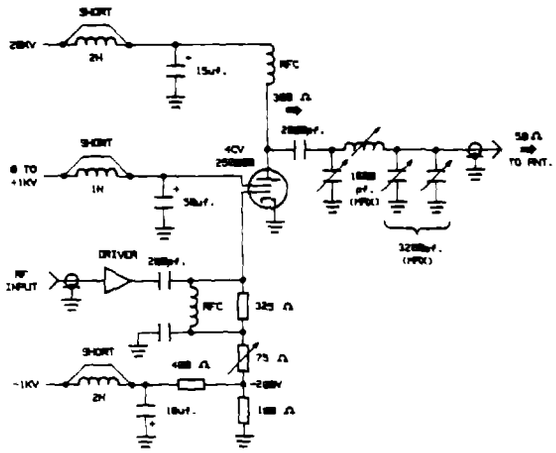

FIGURE 3

AN/FRT-(86)V TRANSMITTER OUTPUT NETWORK

Antennas

Antennas have been installed in the TMX-U vacuum vessel on both the east and west end of the machine for ICRH heating of the TMX-U plasma.

The first antenna to be used was installed on the west end of the machine and consisted of a six-turn loop on one side of the plasma (see Figure 4a, 5a). The antenna subtended an arc of about 90 degrees above the plasma. This configuration proved unsuccessful because its asymmetry caused the plasma density to decrease as power was applied to the plasma. Therefore, the plasma heating efficiency was low. This antenna was modified to the configuration of Figure 4b and 5b with the addition of two three-turn loops on either side of the plasma. This antenna proved successful in demonstrating significant stable plasma heating. Its symmetry eliminated the problem associated with the first antenna. The plasma density was noted to increase slightly and heating efficiencies of up to 40% were observed. To maximize voltage holding of this antenna the tuning had to be carefully matched to create a voltage null at the center of the two loops. To simplify the tuning the design was changed to that shown in Figure 4c and 5c. This antenna showed the same excellent plasma heating characteristics as its predecessor but with the added advantage that the tuning capacitors (c2 and c3) of Figure 5c did not need to be closely tuned to maximize the antenna voltage holding but only grossly matched to share the tuned antenna current. Either of the capacitors (c2 or c3) could be changed to bring the antenna into fine tune. The inductance of th 2 x 170 degree loop antenna is 2.55 uh measured from a point just below the matching capacitors. This antenna has

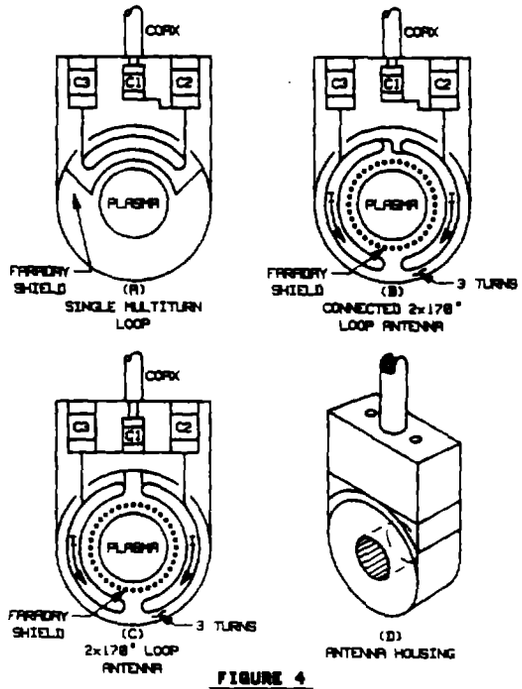

FIGURE 4

WEST CENTER CELL ANTENNAS

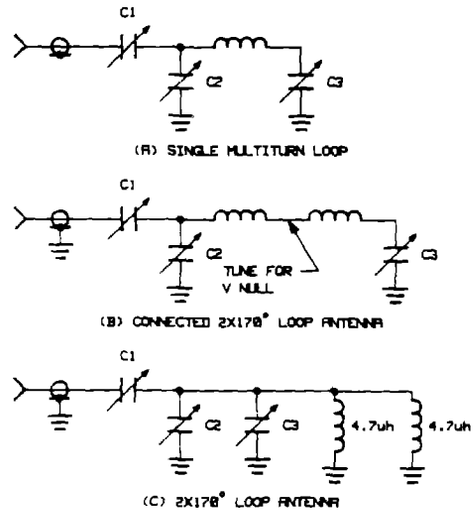

FIGURE 5

WEST CENTER CELL ANTENNA MATCHING NETWORKS

been optimized thru the careful design of the open faraday shield and the insulators associated with the antenna and matching capacitor elements [Ref. 1]. The antenna has been demonstrated to hold 40 to 50 kV peak on the antenna element. Powers in excess of 180 kW have been applied to the antenna, antenna coupling efficiency of greater than 80 percent has been observed. Ion temperatures of 1500 ev have been achieved on plasma where shots were 100 kwatts were applied to the antenna at plasma densities of $2e12cm^{-3}$ [3].

On the east end of the TMX-U machine, two different types of antenna have been used for plasma heating. The first antenna to be installed was the slot antenna shown in Figure 6. This antenna consists of a long hollow copper tube, tapered and flattened at one end to conform to the shape of the plasma. Associated with this antenna, but installed on the outside of the vacuum wall, was a high-power matching network shown schematically in Figure 7. The slot antenna was connected to the matching network by three five-inch diameter 50 ohm coaxial lines. These coax lines penetrated the vacuum wall of the TMX-U vessel through three high-voltage coaxial feeds. Strapping options on these feeds allowed the slot antenna to be driven in various modes of excitation [Ref. 2]. Figure 6 is current and magnetic field distribution in the slot antenna for the two predominant modes of excitation. With the two end coaxes cross-strapped as shown in Figure 6a, (full wave, 1 λ mode), the slot antenna inductance measured from the vacuum wall coax feeds was 0.47 uh. With the antenna driven from only the center coax feed as shown in Figure 6b (half wave, 1/2 λ mode), the antenna inductance was 0.80 uh. The plasma heating performance of the slot antenna showed good electron heating and some ion heating when the plasma was kept from contacting the antenna by plasma limiters. When plasma was allowed to contact the antenna, little heating was observed. Although the slot antenna exhibited strong plasma loading (antenna Q with plasma 10 to 50 vs antenna Q without plasma approximately 300), the amount of the input power that could be accounted for in ion heating was usually small (less than 20 percent). The slot antenna exhibited good electron heating characteristics, and during many experiments the slot antenna was used primarily as a power source to heat electrons.

The slot antenna has recently been replaced on the east end of the TMX-U machine with a dual half-turn loop antenna shown schematically in Figure 8. This antenna is an evolution of the multi-turn loop used on the west end of the machine. The advantages of the dual half-turn loop are (1) much higher RF magnetic field in the plasma region for a given antenna voltage, (2) simple mechanical construction, and (3) easy interface to the existing slot antenna matching network and coaxes. The antenna is driven from two 5-inch coax lines in parallel to reduce the inductance between the TMX-U vacuum wall and the antenna. The total inductance measured from the TMX-U vacuum wall was 0.34 uh and the vacuum Q of the tuned antenna was 517 measured at 3 MHz. Installation of the dual half-turn loop antenna was completed in October, 1985, and performance data on this antenna is minimal at this time. However, plasma shots with 300 kW applied to

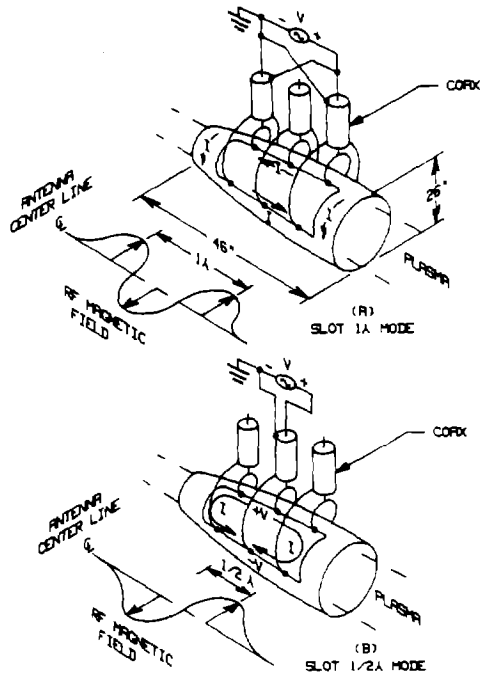

FIGURE 6

SLOT ANTENNA

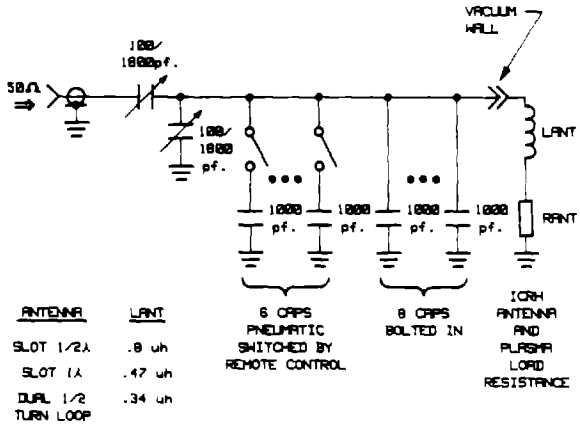

FIGURE 7

EAST ANTENNA MATCHING NETWORK

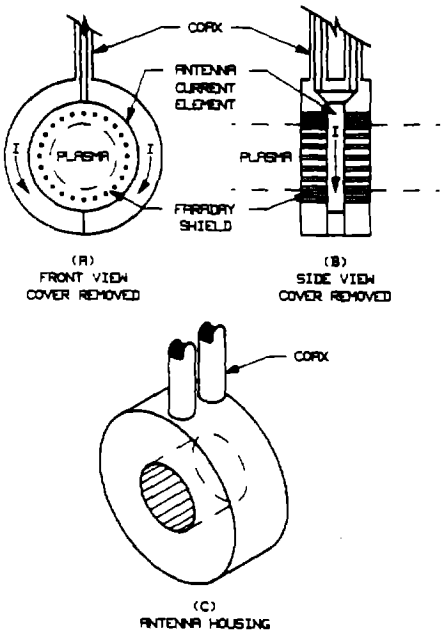

FIGURE 8

EAST ANTENNA DUAL HALF TURN LOOP

the antenna have been achieved, and good plasma response as measured on the TMX-U diamagnetic loops has been observed. The analysis of the data is incomplete at this time.

Control and Data Acquisition

The primary control and data acquisition for th ICRH system is provided by an HP9836 computer and an associated menu-driven, control program (see Figure 1). The computer is connected to a system control CAMAC crate by an HPIB interface buss (IEEE-488). The system control CAMAC crate includes a 5 megabit serial fiber optic data highway that connects to CAMAC crates in the transmitters and antenna diagnostic areas. All ICRH control and data acquisition is done over this serial data highway.

On a typical shot the ICRH operator will request a specified power from each ICRH transmitter. He will also set a maximum reflected power that the transmitter is to allow before shutdown. If for any reason during a shot the transmitter reflected power limit is reached, the transmitter will turn off for a preset time (usually 2 ms) and then turn back on and come up to the requested forward power under automatic control. The shutdown period is to allow any arcs that might occur in the antenna to extinguish before power is reapplied to the antenna.

When a shot fire command is issued by the TMX-U master timing circuit, the automatic level control in the transmitters will bring the transmitter power up to the requested value of forward power within 1 to 2 ms (see Figure 9a and 9b). The forward power request that the ICRH operator provides specifies the peak power that is to be achieved on a given shot. The ICRH operator has the option of using the transmitter internal control system to modulate the transmitter output waveform in accordance with a preprogrammed waveform supplied by a function generator. The peak power achieved is set by the computer forward power request. Typical transmitter waveforms that are used include CW power pulses, 50% duty cycle pulse strings, and voltage ramps. Figure 9 shows typical transmitter power pulses with various programmed waveforms. Figure 10 is a simplified diagram of the ICRH transmitter control system showing the control loops for forward power as well as for reflected power shutdown.

During the ICRH shot, the impedance at the antenna matching network 50 ohm port is monitored by a Hewlett Packard network analyzer. The output of the network analyzer is recorded during a shot. Following the shot, the real and imaginary impedance looking into the matching network is read by the HP9836 control computer. The computer then analyzes this data and calculates the optimum tuning for the matching network components to achieve maximum power transfer to the plasma on the next ICRH shot. The HP9836 control computer is able to read the capacitor values in the antenna matching network by means of a group of linear potentiometers that convert the capacitor values to voltages that are read through the CAMAC serial highway into the control computer. The ICRH operator is able to retune both ICRH antennas in the five-minute intershot time frame. Returning is done from

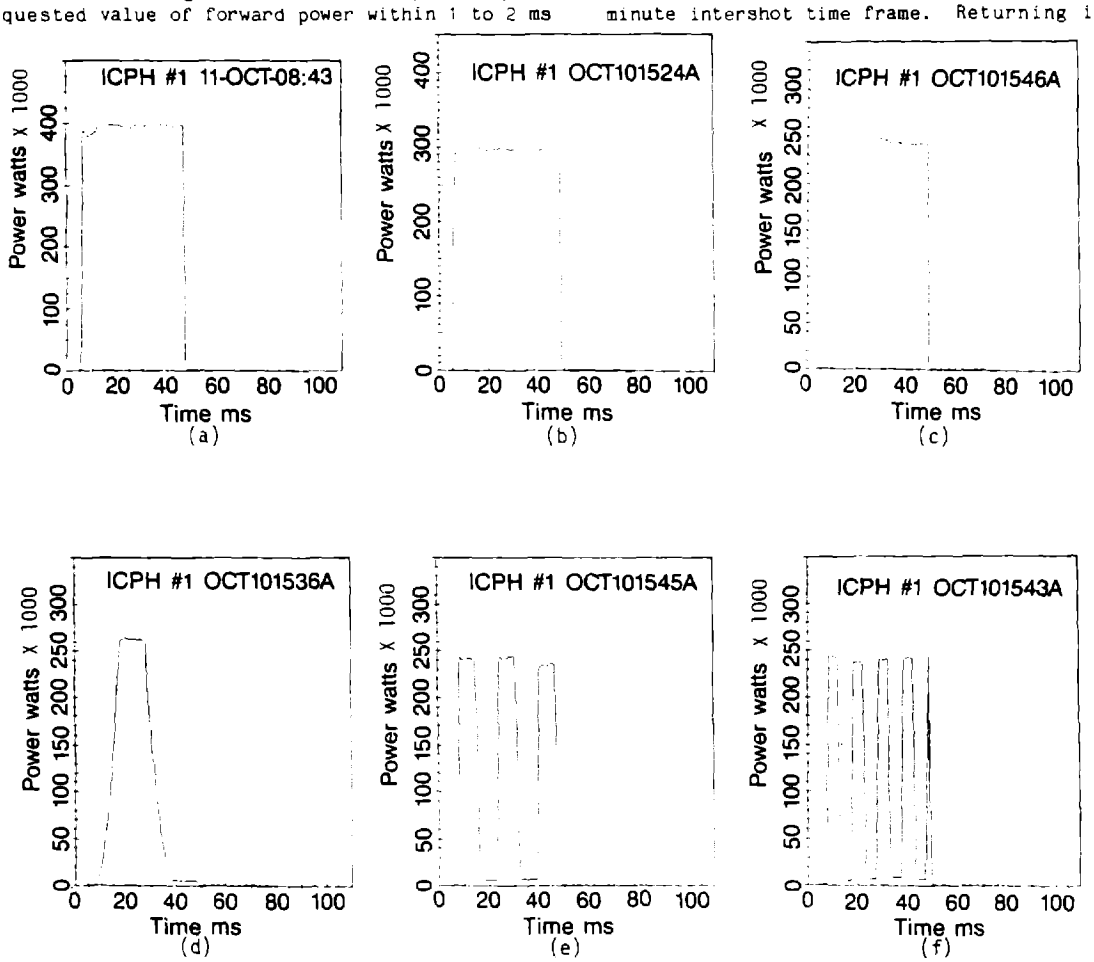

Figure 9.
Typical Transmitter Power Pulses With Various Programmed Wave-forms

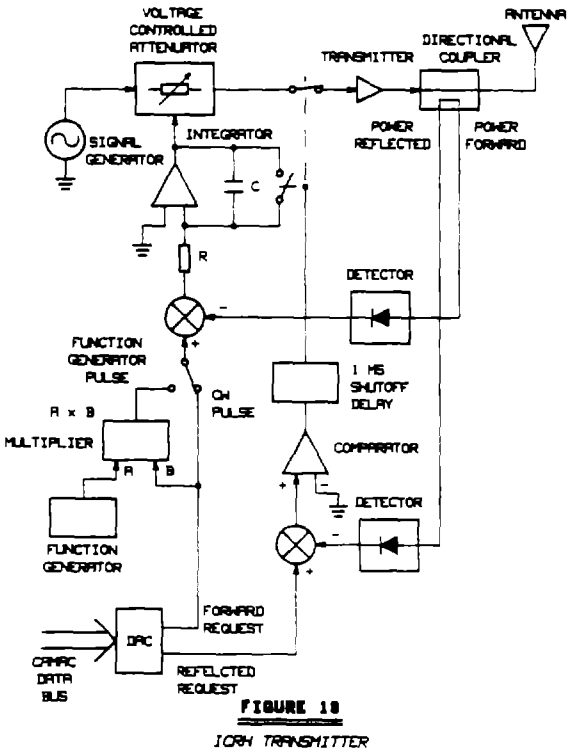

FIGURE 18

ICRH TRANSMITTER CONTROL LOOP

the ICRH transmitters using remote control units that allow the operator to change the capacitors while monitoring their capacitance value on a series of digital voltmeters. The network analyzer data is also used to measure the equivalent plasma loading resistance and to calculate the efficiency of the ICRH system.

Following a shot, the ICRH computer automatically acquires data from the transmitters and antenna diagnostics. This data is then processed in the HP9836 control computer and stored in a dual port memory where it is read by the main TMX-U data computer. Physics data such as ICRH power, plasma loading resistance and magnetic field intensity is achieved on the TMX-U data base, while engineering data such as transmitter power supply voltages and currents are achieved locally on a hard disc with a tape backup system.

Diagnostics associated with the east ICRH antenna include directional couplers mounted both inside the ICRH transmitter and at the 50 ohm input to the antenna matching network. Additionally, a high voltage sample capacitive divider is used to measure the voltage at the maximum voltage point in the antenna matching network. Current in the antenna is measured by Rogowski loops which sample the current on both the inside and outside of the coax feeds and at every point that the antenna contacts the TMX-U vacuum wall. Small loop antennas of approximately a 1-inch area are mounted at strategic points on the antenna to measure the current in the antenna as well as to detect spurious currents that would flow in case of antenna arcing. Large diamagnetic loops surround the plasma on both sides of the antenna. These diamagnetic loops are used to measure the magnetic field strength at the antenna.

The ICRH west antenna diagnostics consist of a pair of small loop antennas to monitor the current in each side of the antenna as well as a high voltage capacitive divider to measure the maximum voltage in the antenna matching network. A Langmur probe is installed between the elements of the Faraday shield to measure plasma parameters. However, this diagnostic has yielded very minimal data due to calibration difficulties. The forward and reflected power to the antenna are measured by high power directional couplers mounted both at the input to the antenna matching network and inside the ICRH transmitter.

Conclusion

Over the past two years the Ion Cyclotron Resonant Heating (ICRH) system used on the TMX-U experiment has matured as a major ion heating source in the TMX-U central cell. Power levels delivered to the antennas have increased steadily due to modifications of the antennas and transmitters. Currently, a total of 800k watts is available from the two ICRH transmitters. The control and data acquisition system for the ICRH continues to evolve with the main goal being automation of the antenna tuning to allow the ICRH control computer to analyze the plasma conditions on the previous shot and calculate the antenna tuning for the next shot. Even with these significant changes in the transmitters and diagnostics, the main thrust of the ICRH program continues to be the development of the antennas to optimized ion heating. The problems associated with high voltages and high currents in the antennas continue to present tough challenges to the electrical and mechanical design of the system. However, the ICRH antennas will be the areas where major innovations will evolve into newer and better ICRH heating system.

References

[1] C. A. Brooksby, S. W. Ferguson, A. W. Molvik, "Ion Cyclotron Resonant Heating (ICRH) 2 x 170 Degree Loop Antenna for the Tandem Mirror Experiment Upgrade (TMX-U)," Eleventh Symposium on Fusion Engineering.

[2] C. A. Brooksby, M. O. Calderon, W. F. Cummins, W. W. Ferguson, V. L. Williamson, "Ion Cyclotron Resonant Heating (ICRH) Slot Antenna for the Tandem Mirror Experiment Upgrade (TMX-U)," Eleventh Symposium on Fusion Engineering.

[3] A. W. Molvik, F. W. Cummins, S. Falabella, P. Poulsen, J. Barter, G. Dimonte, T. Romesser, "ICRF Heating in the Tandem Mirror Experiment-Upgrade (TMX-U)" Proceedings of the fourth International Symposium on Heating in Toridal Plasmas, Rome, Italy, March 21-28, 1984, ISPP pp. 433 (Varenna, Italy).

[4] T. L. Moore, W. F. Cummins, A. L. Henderson, P. G. Karsner, A. W. Molvik, L. R. Pedrotti, C. A. Brooksby, and D. W. Scofield "Ion Cyclotron Radio Frequency Systems and Performance on the Tandem Mirror Experiment-Upgrade", Tenth Symposium on Fusion Engineering.