UCID-19206

CIRCULATION COPY
SUBJECT TO RECALL
IN TWO WEEKS

STATE OF WORK ON THE AMBAL EXPERIMENT

G. W. Hamilton

October 2, 1981

Lawrence Livermore Laboratory

This is an informal report intended primarily for internal or limited external distribution. The opinions and conclusions stated are those of the author and may or may not be those of the Laboratory.

Work performed under the auspices of the U.S. Department of Energy by the Lawrence Livermore Laboratory under Contract W-7405-Eng-48.

DISCLAIMER

This document was prepared as an account of work sponsored by an agency of the United States Government. Neither the United States Government nor the University of California nor any of their employees, makes any warranty, express or implied, or assumes any legal liability or responsibility for the accuracy, completeness, or usefulness of any information, apparatus, product, or process disclosed, or represents that its use would not infringe privately owned rights. Reference herein to any specific commercial product, process, or service by trade name, trademark, manufacturer, or otherwise, does not necessarily constitute or imply its endorsement, recommendation, or favoring by the United States Government or the University of California. The views and opinions of authors expressed herein do not necessarily state or reflect those of the United States Government or the University of California, and shall not be used for advertising or product endorsement purposes.

This report has been reproduced
directly from the best available copy.

Available to DOE and DOE contractors from the
Office of Scientific and Technical Information
P.O. Box 62, Oak Ridge, TN 37831
Prices available from (615) 576-8401, FTS 626-8401

Available to the public from the
National Technical Information Service
U.S. Department of Commerce
5285 Port Royal Rd.,
Springfield, VA 22161

STATE OF WORK ON THE AMBAL EXPERIMENT

INTRODUCTION

This is a report on the status of work on the AMBAL tandem mirror experiment at Novosibirsk. It was presented by G. I. Dimov at the IAEA Technical Committee Meeting on Open Confinement Systems, September 1981. The meeting was attended by R. R. Borchers and E. B. Hooper of Lawrence Livermore National Laboratory (LLNL) who brought back the report. The translation is by G. W. Hamilton. The report is relevant to the LLNL MFE program and is therefore being distributed as a UCID-translation. (NOTE: The translator has included two photographs--Figures 7 and 8--for information. They were not part of the original paper.)

BACKGROUND

Design of the AMBAL experiment in the realized version was started at the beginning of 1978, and production of its basic sub-assemblies was begun at the end of the same year.

CONFIGURATION

Figure 1 shows the diagram of the AMBAL experiment. The magnetic fields in the end plugs have the minimum-B configuration and consist of a pair of Yin-Yang coils. The central solenoid in this experiment is relatively short. The solenoidal part of the field, consisting of three circular coils, has the length of the order of the coil diameter. The longest part of the central cell in length is occupied by the transition sections, in which the circular cross-section of magnetic flux is converted to an elliptical cross-section, at

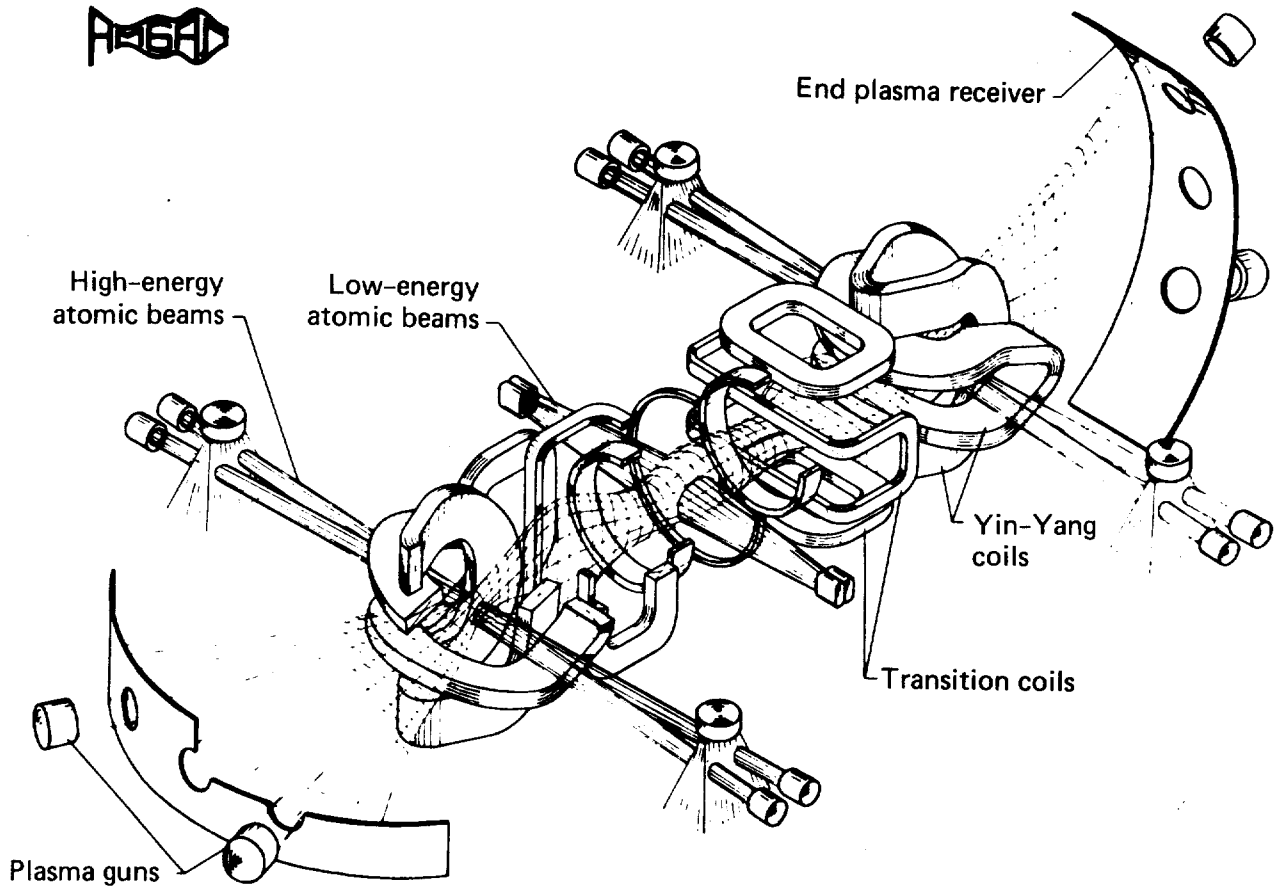

Figure 1. Isometric view of AMBAL.

the inner mirrors of the end plugs. To connect the magnetic field of the solenoid with the end plugs, two flat coils and one C-shaped coil are used at each transition sectionl.[1] Exiting the outer mirror, after being strongly spread out, the magnetic flux passes through the end plate, which receives the plasma flowing out of the mirror.

In the end plugs, dense plasmas are built up and maintained with high-energy ions using charge-exchange injection. Each end plug is equipped with four injectors which beam hydrogen ions through a gas charge-exchange cell where they are converted to atomic beams before they cross the magnetic field into the plug chamber. The ionic component of the beam after charge-exchange is magnetically deflected and separated on a special receiving plate.

Plasma build-up in the end plugs begins with a warm start-up plasma which serves as a starting target for the atomic beams. The start-up plasma is introduced into the plugs along the magnetic fields through the outer mirror from two pairs of plasma guns installed near the plasma end receivers. After a hot plasma is built up by ionization and charge exchange on the start-up plasma, the plasma guns are turned off. Thereafter the necessary density of hot plasma in the end plugs is maintained by ionization of the atomic beams on the hot plasma. In the AMBAL experiment, half of the injectors in the end plugs are start-up injectors. They have a short pulse duration and are turned on only at the time of hot-plasma buildup.

The main plasma in the central cell is maintained by injectors of low-energy atoms (of the order of the ion temperature of the main plasma).

Figure 2 is a general view of the AMBAL experiment. The size of the experiment in plan is 11 m x 7 m. All magnet systems of the experiment are located outside the vacuum chamber. The end plasma receivers are located in separate end vacuum tanks, in which are also located the main titanium sorption pumps. Figure 3 shows the equipment cross-section at the median plane of one of the end plugs.

Ion injectors with charge-exchange targets and separators are installed in separate vacuum tanks (see Figs. 2 and 3). In these tanks there are cryogenic pumps for pumping of hydrogen emitted by the injectors and there are sorption titanium pumps for pumping of hydrogen produced by ion and atomic beams hitting walls and special receiver surfaces.

The main parameters of the experiment are shown by Table I.

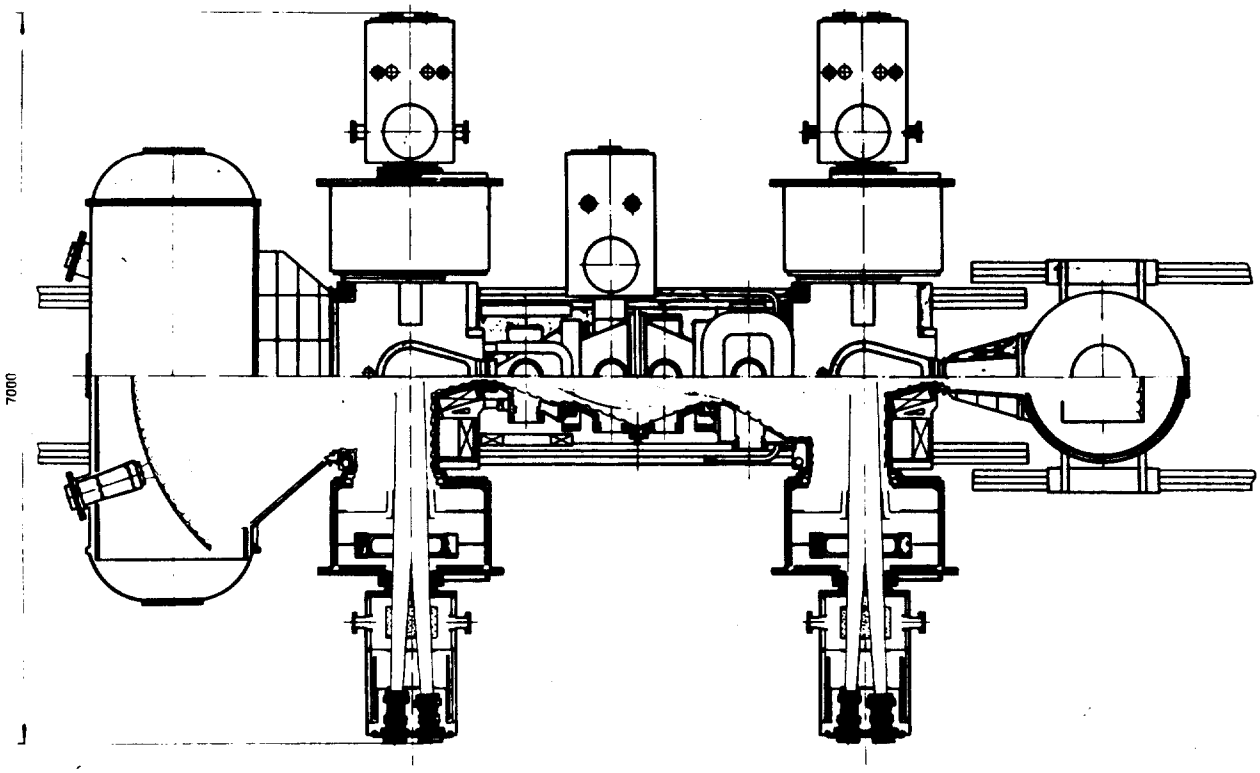

Figure 2. Plan view of AMBAL.

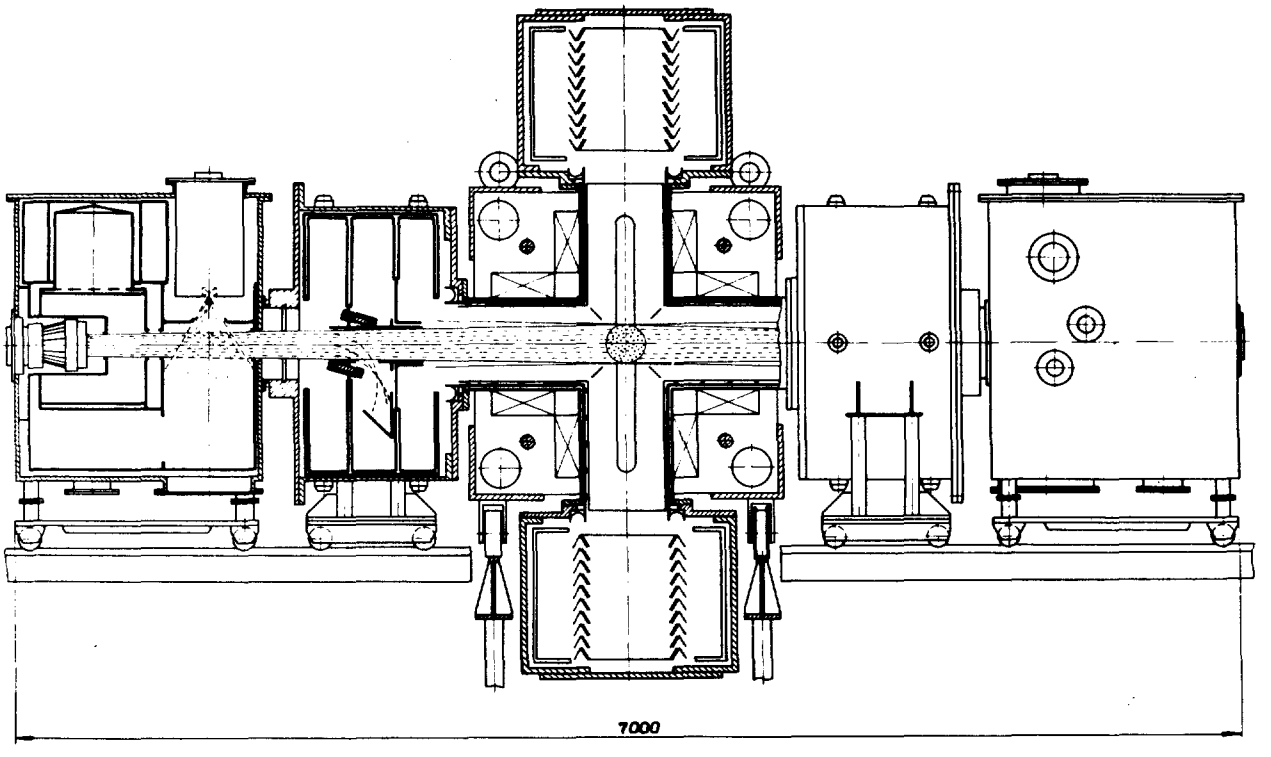

Figure 3. Side view of AMBAL injection system. From left to right are shown the injector, the magnesium vapor jet, the charged beam disposal, and the pumping system.

TABLE I. Main parameters of AMBAL experiment.

Parameters	End cells	Central cell
Central magnetic field (kG)	10(15)	1.5(2.25)
Mirror magnetic field (kG)	20(30)	20(30)
Distance between mirrors (m)	1	3.5
Plasma diameter (cm)	22	54
Plasma volume (ℓ)	2 x 15	350
Type of ions	protons	deuterons
Injection energy (eV)	20,000 to 25,000	200
Starting injection current (A)	2 x 150	--
Main injection current (A)	2 x 50	20
Pulse duration (ms)	100-500	100-500
Plasma density (cm^{-3})	3×10^{13}	10^{13}
Average ion energy (keV)	20	0.5
Electron temperature (keV)	1	1
Classical ion lifetime (ms)	20	30

The magnet system is supplied with secondary current impulse of 60 MW power. The experiment will begin to function using an available generator of about 25 MW; therefore the magnetic field will be reduced by a factor of 1.5.

The AMBAL vacuum system operates on a cycle of hundreds of millisecond duration. In external injection tanks hydrogen from the main injectors is pumped by cryogenic pumps of area 1.15 m x 4 m = 4.6 m^2 at a pressure of 5×10^{-5} Torr. In the internal injector tanks pumping is produced by sorption titanium pumps of area 10.2 x 4 = 40.8 m^2 at pressure of 3×10^{-7} Torr. The pressure drop is assured mainly by gas-impedance jets. Pumping of the main chamber of the experiment is by sorption titanium pumps in the end tanks (28 m x 2 m = 56 m^2) and in vertical tanks attached above and below to the end tanks as shown in Fig. 3 (2.65 m x 4 m = 10.6 m^2). The total area of pumping surfaces in the experiment is about 112 m^2. Heating is provided

to all vacuum chambers except for the external injector tanks. The working plasma volume is surrounded by heated walls of niobium tape. The expected vacuum between the plasma and the chamber walls lies in the range 10^{-6} to 10^{-7} Torr.

VAPOR JET

One and one-half years ago the gas-impedance magnesium vapor jet was completed.[2] By means of a nozzle with "central body" and a collimator, a dense jet was formed with sharp boundaries. At a distance of 2 to 3 cm from the boundary, the vapor density was reduced 10^4 times. It is established that hydrogen is badly sorbed by frozen magnesium on the jet receiver; therefore, it is necessary to have good hydrogen pumping at the exit of the jet through jalousies in the receiver. With hydrogen pressure in front of the jet in the range 10^{-5} - 10^{-3} Torr, a reduction of pressure by a factor of 400 was attained with a target thickness of 3×10^{15} atoms/cm^2. Preparations and tests are now being conducted for serial production of the magnesium vapor jet.

TITANIUM VAPORIZER

For deposition of titanium on the sorbing surfaces, an extended arc vaporizer of several geometries, in which the cathode spot uniformly moves over the entire titanium working surface, was developed.[3] This problem was solved without the use of external magnetic fields. Fifty-four of these vaporizers are planned for the experiment, which will be turned on 1 to 3 s immediately before the working cycle. (The full quantity of evaporation of titanium before each cycle is about 500 mg.) Development of the arc vaporizer has four advantages over the usual thermal vaporizer: large resource of work, high evaporation speed, lack of inertia, lower energy need.

PLASMA GUN

An experimental model of a ring plasma gun was developed for creating of the starting (target) warm plasma in the end plugs.[4] The gun will emit

tubular plasma jets of diameter 14 cm in local solenoidal fields of 3.3 kG. The jets must pass through a minimum field of 500 G, through the outer mirror to enter the plug and to intersect the midplane in the shape of ellipses with axes 18 cm x 8.5 cm. Figure 4 schematically shows the experimental plasma gun. It has a ring diaphragm channel of width 1 cm with a cold aluminum cathode (5). Ignition is annular in the transverse magnetic field with closed Hall current by means of an igniting electrode (3). Hydrogen is admitted into the cathode volume through an aperture in electrode (2) by means of a valve (1). Located in the solenoid with a field of 3 kG, these guns successfully produced, in a small axially-symmetric cell a full plasma jet of diameter 13.5/10 cm, sufficiently uniform in azimuth, the plasma density in the jet was 3×10^{14} with an electron temperature 10 eV to 15 eV; the plasma flux was about 2 cm^{-3} equivalent kA. The measured percent of ionization in the jet was sufficiently high--not less than 99.9%. The composition of molecular hydrogen ions did not exceed 0.5%; the flux of heavier ions approached 5%.

STARTUP INJECTORS

The experimental development of the start-up proton injectors (beams) with power-supply circuits is completed.[5] The construction and parameters of such injectors are shown in Fig. 5. We have begun to fabricate serial models. Proton beams have been produced with 75-A current, 20-keV energy, and 200-μs pulse duration (diameter of emission surface is 13 cm). The measured beam divergence is 0.7 x 1.4 degrees. A distinctive feature of the developed injectors is the high content of atomic hydrogen ions in the beam--95%.

MAIN INJECTORS

The principal diagram of the main injectors is identical to the diagram of the start-up injectors. (The construction and parameters of the main injectors are shown in Fig. 6.) At present, the construction of serial models of the plasma emitter of the main injector is being completed. A stable plasma flux has been produced on the emitting surface with current up to 40 A with 100 ms pulse. Assembly of a test stand is being completed for testing the main injectors with production of proton beams up to 500 ms.

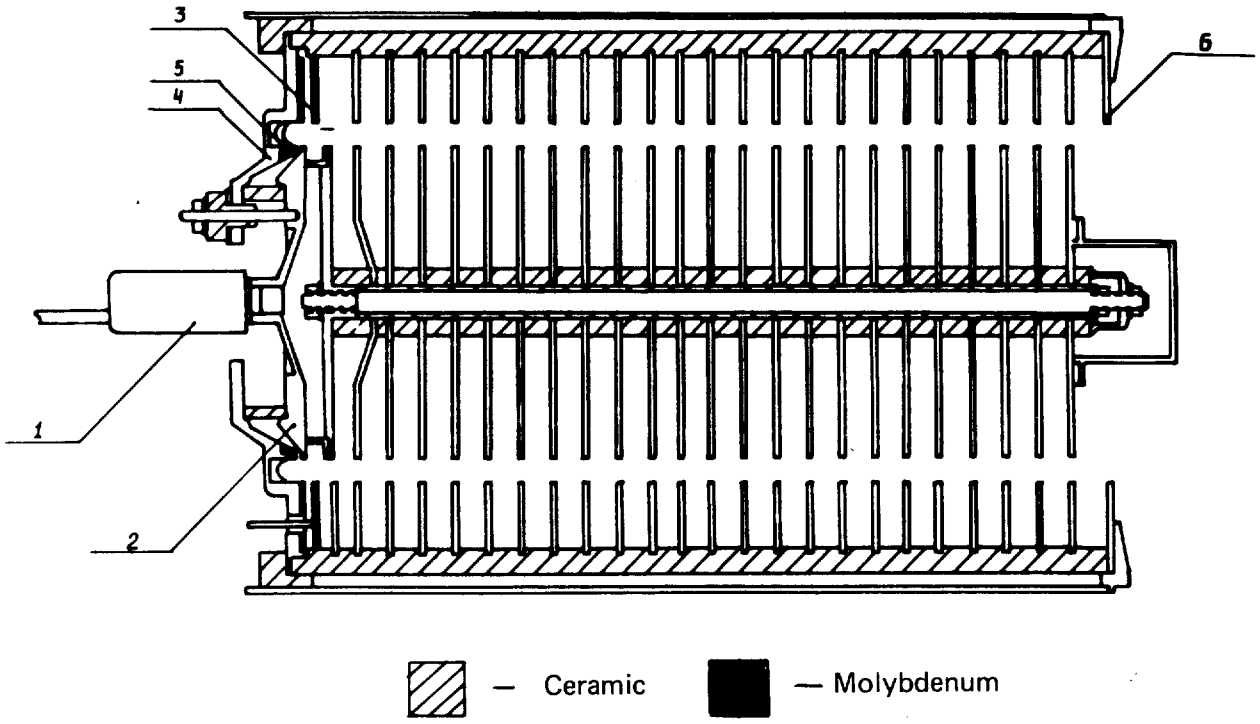

Figure 4. Ring plasma gun for creation of the target plasma.
1. valve
2. electrode
3. igniting electrode
4. not identified in text
5. cold aluminum cathode.

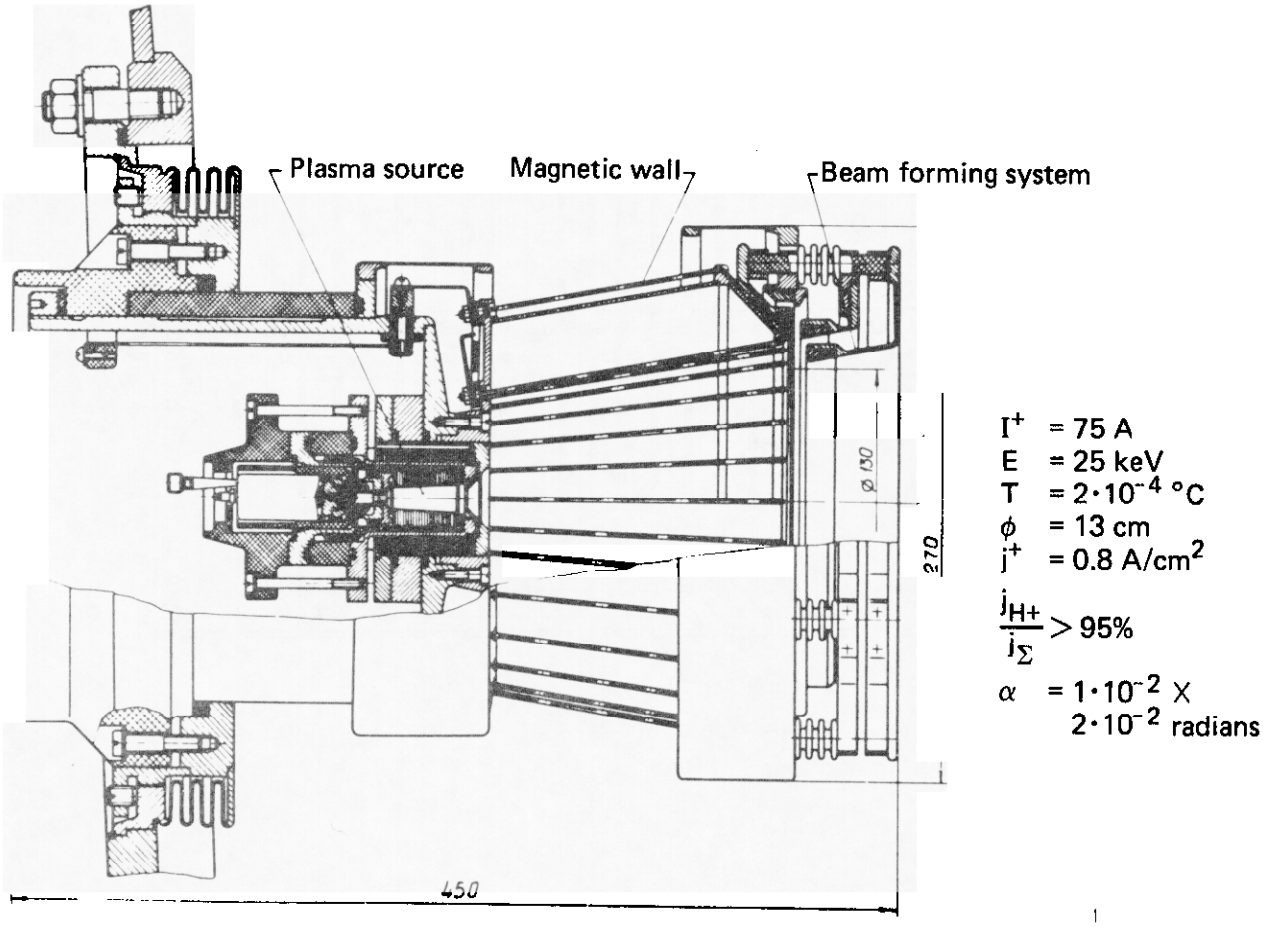

Figure 5. Cutaway view of start-up injector, Start-2.

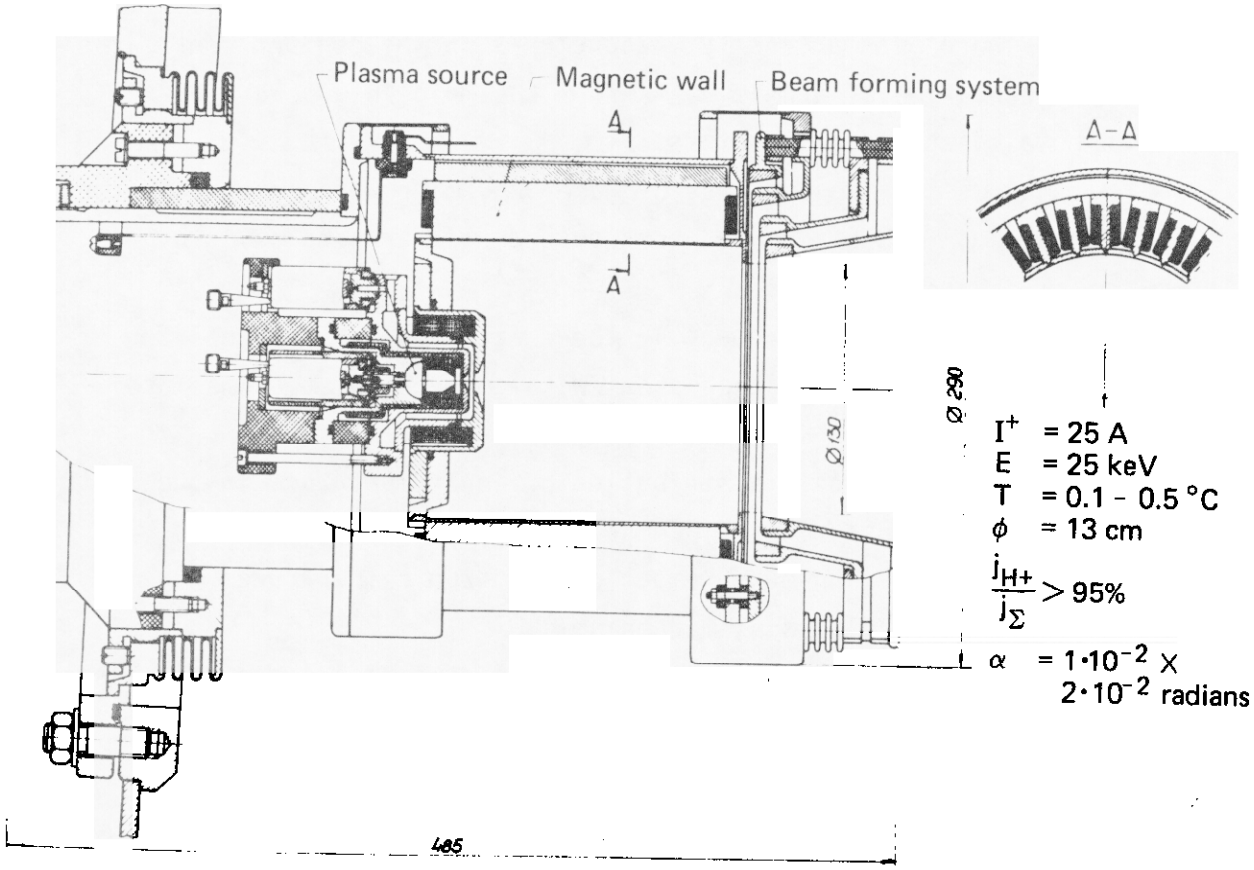

Figure 6. Cutaway view of main injector, INAK.

Simultaneously, final adjustment and testing or serial systems of power supplies of the main injectors will be conducted.

DIAGNOSTICS

The first series of developed plasma diagnostic systems in the AMBAL experiment includes the following:

1. Multi-chord plasma density measurements in the end and central cells by attenuation of atomic beams from the main injectors and from special diagnostic injectors.
2. Plasma density measurements by laser and microwave interferometers.
3. Energy analysis of charge-exchange atoms in the end cells by a multi-channel analyzer.
4. Ion temperature measurement in the central cell by an analyzer of low-energy charge-exchange atoms with conversion of atoms into negative ions.
5. Measurement of radial distribution of ion temperature in the central cell by scattering of a diagnostic beam of helium ions.
6. Thompson scattering measurement of electron temperature.
7. Measurement of plasma diamagnetism.
8. Energy analysis and density measurement of ions leaving the plasma through the mirrors, using end analyzers and monitors.
9. Measurement of maximum and minimum potential on the axis of the experiment using a beam of helium ions.
10. Measurement of radial potential distribution in the central cell.
11. Measurement of density, electron temperature, and plasma potential on the periphery using Langmuir probes.
12. Pulsed measurement of gas density and cold plasma between the hot plasma and chamber walls.
13. Registration of plasma oscillations.
14. Registration of impurities by observation of spectral radiation.

For control of experimental observation, collection and processing of information from the diagnostics an electronic system was developed based upon the EVM "Electronika-100/25."

NUMERICAL MODELING

A complex of programs for numerical modeling of plasma behavior in the experiment is under development. Stationary plasma distributions in space and by velocity have been computed separately in the end plugs and central cells, taking into consideration the magnetic field geometry, conditions of injection of atomic beams, and neoclassical transverse ion diffusion.[6]

The experiment has entered the stage of assembly of the main magnet-vacuum system. Of the present work the most laborious is the preparation and assembly of built-in vacuum sub-assemblies and systems of electric feed.

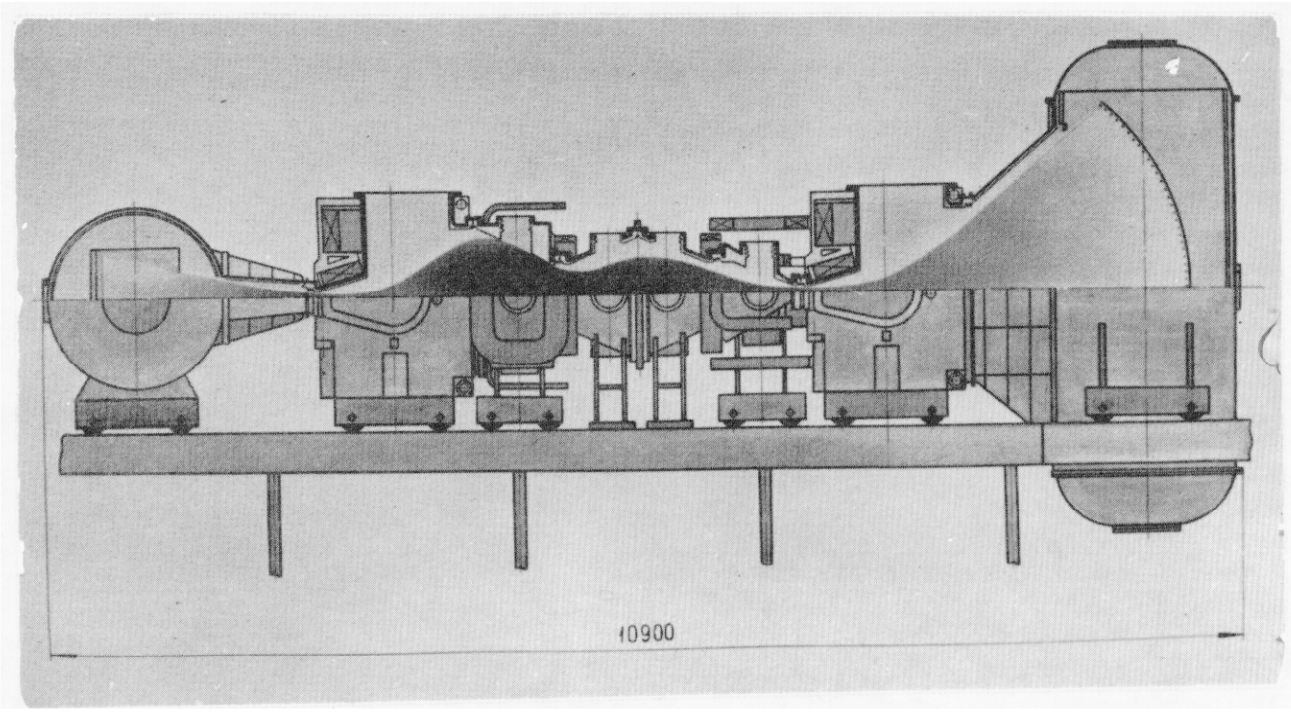

Figure 7. Side view of AMBAL. not part of original paper)

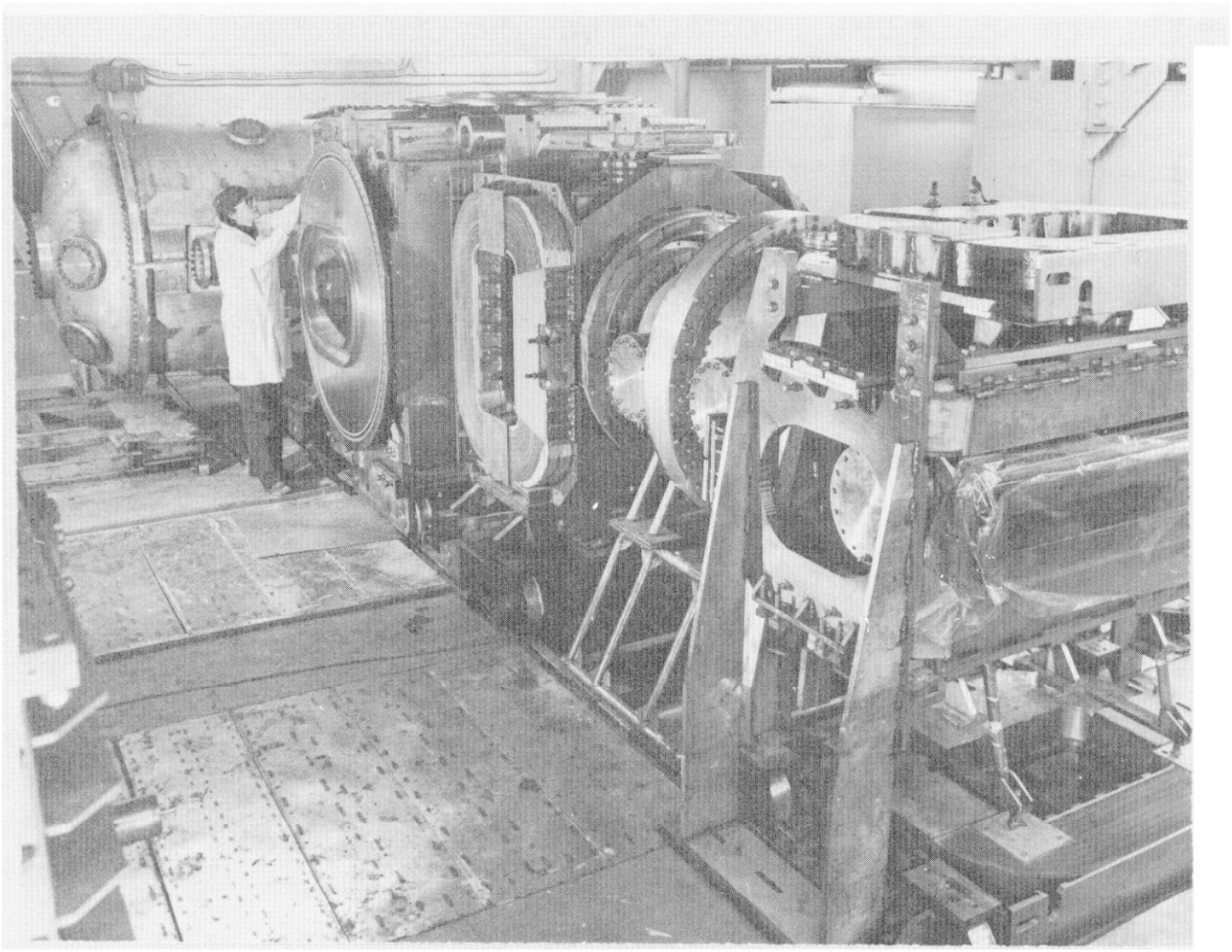

Figure 8. Photograph of AMBAL assembly. (not part of original paper)

REFERENCES

1. G. I. Dimov, P. B. Lysyanskii, M. V. Tauber, I. Ya. Timoshin, K. K. Shrainer, "Magnet System of the Experimental Trap AMBAL," report at the Second All-Union Conference on Engineering Problems of Thermo-Nuclear Research, Leningrad, 1981.
2. V. G. Sokolov, I. Ya. Timoshin, Pulsed Magnesium Vapor Target for Injectors of Hydrogen Atoms, Preprint 81-03, Novosibirsk, 1981.
3. Ye. D. Bender, "Extended Arc Titanium Vaporizers," Report at the Second All-Union Conference on Engineering Problems of Thermo-Nuclear Research, Leningrad, 1981.
4. G. I. Dimov, A. A. Ivanov, G. V. Roslyakov, Production and Investigation of a Jet of Target Plasma for an Open Trap, in printing.
5. V. I. Davidenko, G. V. Roslyakov, V. Ya. Savkin, Proton Injector START-2, in printing.
6. P. B. Lysyanskii, M. A. Tiunov, B. M. Fomel, Computation of Transport Processes in an Ambipolar Trap by the Method of Direct Statistical Modeling, in printing.