UCRL- 85156
PREPRINT

CIRCULATION COPY
SUBJECT TO RECALL
IN TWO WEEKS

Quadrantal Symmetry Calculations for Nonsymmetric Half-Plane Filters

Dennis M. Goodman

This paper was prepared for submittal to
14th Asilomar Conference

December 3, 1980

Lawrence Livermore Laboratory

This is a preprint of a paper intended for publication in a journal or proceedings. Since changes may be made before publication, this preprint is made available with the understanding that it will not be cited or reproduced without the permission of the author.

DISCLAIMER

This document was prepared as an account of work sponsored by an agency of the United States Government. Neither the United States Government nor the University of California nor any of their employees, makes any warranty, express or implied, or assumes any legal liability or responsibility for the accuracy, completeness, or usefulness of any information, apparatus, product, or process disclosed, or represents that its use would not infringe privately owned rights. Reference herein to any specific commercial product, process, or service by trade name, trademark, manufacturer, or otherwise, does not necessarily constitute or imply its endorsement, recommendation, or favoring by the United States Government or the University of California. The views and opinions of authors expressed herein do not necessarily state or reflect those of the United States Government or the University of California, and shall not be used for advertising or product endorsement purposes.

UCRL-85156

QUADRANTAL SYMMETRY CALCULATIONS FOR NONSYMMETRIC HALF-PLANE FILTERS*

Dennis M. Goodman

Lawrence Livermore National Laboratory

Abstract

The conditions under which an all-pole, stable, nonsymmetric half-plane filter has a quadrantally-symmetric magnitude response are investigated. It is shown that quadrantal symmetry is obtained if and only if the denominator of the transfer function can be written as the product of two functions; the inverse z-transforms of these two functions have different regions of support and one of them must obey a symmetry condition.

I. INTRODUCTION

The class of filters we will consider is the class of stable, all-pole, nonsymmetric half-plane filters whose transfer functions have the form

$$H(z_1,z_2) = \frac{1}{B(z_1,z_2)} \tag{1}$$

where

$$B(z_1,z_2) = \sum_{n=0}^{N} b(0,n)z_2^n + \sum_{m=1}^{M}\sum_{n=-L}^{N} b(m,n)z_1^m z_2^n \tag{2}$$

From (2) we see that $\{b(m,n)\} = \mathcal{F}^{-1}[B(z_1,z_2)]$ has support on a bounded subset of the shaded region on Figure 1. We will assume that $\{b(m,n)\}$ is a real sequence, and since our filter is assumed to be stable, $B(z_1 z_2)$ must satisfy [1]:

$$B(z_1,z_2) \neq 0$$

$$\forall (z_1,z_2):\ |z_1| \le 1,\ |z_2| = 1 \tag{3a}$$

$$B(0,z_2) \neq 0\ \forall z_2:\ |z_2| \le 1 \tag{3b}$$

The quandrantal symmetry condition

$$|H(e^{-iu},e^{-iv})| = |H(e^{-iu},e^{iv})|$$

$$\forall (u,v) \in [-\pi,\pi]^2 \tag{4}$$

is a necessary requirement for several of the more common frequency response specifications (all circularly symmetric filters, certain fan filters, etc.). It was shown in [2,3] that a stable quarter-plane filter had a quadrantally symmetric magnitude response if and only if its transfer function was separable, here we show that the conditions in the nonsymmetric half-plane case are somewhat less restrictive.

In what follows we will make much use of the 2-D homomorphic transforms given in operator notation by

$$\mathcal{H} = \mathcal{F}^{-1}\ \ln \mathcal{F} \tag{5a}$$

$$\mathcal{H}^{-1} = \mathcal{F}^{-1}\exp \mathcal{F} \tag{5b}$$

where $\mathcal{F}$ denotes Fourier transformation, and $\mathcal{F}^{-1}$ denotes the inverse of $\mathcal{F}$, i.e., Fourier series expansion. The properties of these operators are discussed at length in [1,4]; if $\mathcal{H}$ is applied to a given 2-D sequence, the result is a second 2-D sequence, usually called the cepstrum of the first. In words the cepstrum of a given sequence is the inverse Fourier transform of the logarithm of its Fourier transform. If $\{c(m,n)\}$ is our given sequence, then the notation for its cepstrum will be $\{\hat{c}(m,n)\}$. We list below the properties of the operators $\mathcal{H}$ and $\mathcal{H}^{-1}$ which are of use to us, and refer the reader to [1,4] for proofs.

*This work was performed under the auspices of the U.S. Department of Energy by the Lawrence Livermore Laboratory under contract number W-7405-ENG-48, and sponsored in part by the NSF under grant ENG-78-04240.

ALL MATERIAL IN THIS SPACE [illegible]

Property a. $\mathcal{H}[\{a(m,n)\} * \{b(m,n)\}] = \{\hat{a}(m,n)\} + \{\hat{b}(m,n)\}$

(* denotes convolution)

Property b. $\mathcal{H}^{-1}[\{\hat{a}(m,n)\} + \{\hat{b}(m,n)\}] = \{a(m,n)\} * \{b(m,n)\}$

Property c. Let $\{b(m,n)\}$ be as in (2) and assume that $B(z_1,z_2)$ satisfies (3). Then $\{\hat{b}(m,n)\}$ is an ℓ^1 sequence and has support on the shaded region shown in Figure 1.

Property d. Let Λ be a subset of the 2-D lattice which has the following property: if $\{a(m,n)\}$ and $\{b(m,n)\}$ are arbitrary sequences with support on Λ, then their convolution, $\{a(m,n)\} * \{b(m,n)\}$, also has support on Λ. Then if $\{\hat{c}(m,n)\}$ is an ℓ^1 sequence with support on Λ, so is $\{c(m,n)\} = \mathcal{H}^{-1}\{\hat{c}(m,n)\}$.

II. A NECESSARY AND SUFFICIENT CONDITION FOR QUADRANTAL SYMMETRY

Since we have assumed that (1) is quadrantally symmetric,

$$|B(e^{-iu},e^{-iv})|^2 = |B(e^{-iu},e^{iv})|^2 \quad \forall (u,v) \in [-\pi,\pi]^2 \tag{6}$$

Let $\{g(m,n)\} \triangleq \mathcal{F}^{-1}\{|B(e^{-iu},e^{-iv})|^2\}$, then $\{\hat{g}(m,n)\} = \mathcal{F}^{-1}\{\log|B(e^{-iu},e^{-iv})|^2\}$, and by (6),

$$\hat{g}(m,n) = \hat{g}(m,-n) \quad \forall (m,n) \tag{7}$$

Furthermore, since $\{b(m,n)\}$ is assumed to be real, $\{g(m,n)\} = \{b(m,n)\} * \{b(-m,-n)\}$; hence by property a.

$$\{\hat{g}(m,n)\} = \{\hat{b}(m,n)\} + \{\hat{b}(-m,-n)\} \tag{8}$$

The fact that (1) is assumed to be stable implies (by property c.) that $\{b(m,n)\}$ has support on the shaded region of Figure 1; it follows from (7) and (8) that

$$\hat{b}(m,n) = \hat{b}(m,-n) \quad \forall (m,n) : m \geq 1. \tag{9}$$

We now decompose $\hat{b}(m,n)$ as follows:

write

$$\{\hat{b}(m,n)\} = \{\hat{c}(m,n)\} + \{\hat{d}(n)\} \tag{10}$$

where $\{\hat{c}(m,n)\}$ has support on the shaded region shown in Figure 2 and the support of $\{\hat{d}(n)\}$ is restricted to the non-negative n-axis, i.e., $\hat{d}(n) \neq 0$ only if $n \geq 0$. From (9) it follows that $\hat{c}(m,n) = \hat{c}(m,-n)$ for all (m,n). Since the regions of support of $\{\hat{c}(m,n)\}$ and $\{d(n)\}$ both satisfy the condition given in property d., it follows that $\{c(m,n)\} = \mathcal{H}^{-1}\{\hat{c}(m,n)\}$ has support on the shaded region of Figure 2 and that $\{d(n)\} = \mathcal{H}^{-1}\{\hat{d}(n)\}$ has support on the non-negative n-axis. Furthermore, it is obvious that $\{c(m,n)\}$ has the same symmetry property $\{\hat{c}(m,n)\}$ possessed, i.e., $c(m,n) = c(m,-n)$ for all (m,n). Applying $\mathcal{H}^{-1}$ to (10) yields

$$\{b(m,n)\} = \{c(m,n)\} * \{d(n)\} \tag{11}$$

We now wish to show that the two sequences on the RHS of (11) have bounded support. This is easy for $\{d(n)\}$: keeping in mind that $c(0,n) \neq 0$ only if $n = 0$, it follows that:

$$d(n) = \frac{b(0,n)}{c(0,0)} \quad \forall n \tag{12}$$

hence from (2) we see that $d(n) \neq 0$ only if $0 \leq n \leq N$.

By (12) and (3b), it follows that $\{d(n)\}$ has an ℓ^1 inverse, $\{d(n)\}^{-1}$, which also has support restricted to the non-negative n-axis. Convolving both sides of (8) with $\{d(n)\}^{-1}$ yields:

$$\{b(m,n)\} * \{d(n)\}^{-1} = \{c(m,n)\} \tag{13}$$

if we keep in mind the regions of support of $\{b(m,n)\}$ and $\{d(n)\}^{-1}$, it is obvious from (2) and (13) that

$$c(m,n) = 0 \quad \forall m > M \tag{14a}$$

and

$$c(m,n) = 0 \quad \forall n < -L \tag{14b}$$

since $c(m,n) = c(m,-n)$ $\forall$ (m,n) it follows that

$$c(m,n) = 0 \quad \forall n > L \tag{14c}$$

Hence we have shown that both $\{c(m,n)\}$ and $\{d(n)\}$ have bounded support.

Taking the z-transform of equation (11) yields

$$B(z_1,z_2) = C(z_1,z_2)D(z_2) \tag{15}$$

and, by applying the conditions in equation (3), we see that

$C(z_1,z_2) \neq 0$

$$\forall (z_1,z_2): \ |z_1| \leq 1, \ |z_2| = 1 \tag{16a}$$

$$D(z_2) \neq 0 \qquad \forall z_2: \ |z_2| \leq 1 \tag{16b}$$

We summarize our discussion in the following theorem.

Theorem: Let the nonsymmetric half-plane filter described by (1) and (2) obey the stability condition (3) and the quadrantal symmetry condition

ALL MATERIAL IN THIS SPACE WILL BE DELETED

(4). Then $B(z_1,z_2$ must be of the form $C(z_1,z_2)D(z_2)$ where $D(z_2)$ is a polynomial in z_2 and satisfies the stability condition (16b); $C(z_1,z_2)$ satisfies the stability condition (16a), and $\{c(m,n)\} = \mathcal{Z}^{-1}[C(z_1,z_2)]$ has support on a bounded subset of the region shown in Figure 2 and obeys the symmetry condition $c(m,n) = c(m,-n)\ \forall\ (m,n)$.

By considering equation (11) it is possible to place an additional constraint on the support of $\{d(n)\}$ and as a result say something about the support of $\{b(m,n)\}$.

Corollary: Under the conditions stated in the above theorem, $B(z_1,z_2)$ must be of the form

$$B(z_1,z_2) = \sum_{n=0}^{P} b(0,n)z_2^n + \sum_{m=1}^{M}\sum_{n=-L}^{N} b(m,n)z_1^m z_2^n \tag{17}$$

where $N \geq L$ and $P = N - L$.

Proof: Assume $d(n) \neq 0$ only if $0 \leq n \leq P \leq N$. The region of support resulting from the convolution of $\{c(m,n)\}$ and $\{d(n)\}$ is shown in Figure 3. Since $P + L = N$, the result follows.

III. INCORPORATION OF THE SYMMETRY CONDITIONS INTO A DESIGN ALGORITHM

In this section we discuss how the results obtained in Section II could be incorporated into the design algorithm described in [6] and what advantages might result. We will asume that an all-pole filter is being designed; however, if a non-unity denominator is desirable, there are symmetry conditions for it as well [2].

The algorithm developed in [6] combines a non-linear optimization algorithm with a spectral factorization procedure to produce filters which are both stable and good approximations to the desired response in a weighted least-squares sense. This is accomplished by minimizing the weighted sum of two errors, $\mathcal{E}_a$ and $\mathcal{E}_s$. $\mathcal{E}_a$ is the approximation error.

$$\mathcal{E}_a = \sum_{m,n} W(u_m,v_n)\left[S(u_m,v_n) - \frac{1}{\left|B(e^{-iu_m},e^{-iv_n})\right|}\right]^2, \tag{18}$$

where $\{(u_m,v_n)\}$ is a discrete set of frequencies over which the magnitudes response is to be optimized, $W(u_m,v_n)$ is a weighting function, $S(u_m,v_n)$ is the desired magnitude response, and $B(z_1,z_2)$ is defined in Section II. $\mathcal{E}_s$ is the "stability" error:

$$\mathcal{E}_s = \sum_{m,n} [b(m,n) - b^+(m,n)], \tag{19}$$

Where $\{B^+(z_1,z_2)\}$ is the spectral factor of $|B(z_1,z_2)|^2$ which has support on the region shown in Fig. 1 and which satisfies the stability conditions of Eq. (3). If $\{B(z_1,z_2)\}$ also satisfies Eq. (3), then $\{b(m,n)\} = \{b^+(m,n)\}$. The idea behind including $\mathcal{E}_s$ in the error function is that by driving $\mathcal{E}_s$ to zero we force $\{b(m,n)\}$ to be stable. A discussion of spectral factorization is contained in [1, 4, 6].

The simplest way to apply the results of Section II to any 2-D design algorithm (when such an algorithm is used to design quadrantally symmetric filters) is to reconfigure the support of $\{b(m,n)\}$ from that given in Eq. (2) to that shown in Fig. 3. This step does not necessarily reduce the number of non-zero filter coefficients, but it does place them where they will do the most good.

Assuming that the support of $\{b(m,n)\}$ has been reconfigured, a second step would be to express $\{b(m,n)\}$ as shown in Eq. (11), and use the terms of $\{c(m,n)\}$ and $\{d(n)\}$ (rather than those of $\{b(m,n)\}$ as parameters in the optimization algorithm. By using the symmetry constraints on $\{c(m,n)\}$,we can reduce the number of parameters from $M(P+2L) + (P+1)$ to $ML + (P+1)$. This reduction is particularly important since most optimization algorithms must invert a matrix whose size equals the number of parameters. This change in the filter design algorithm can be made (assuming that the algorithm was set up to use the coefficients of $\{b(m,n)\}$ as parameters) by a simple application of the chain rule. It is also possible to reduce the computational burden in computing the FFT of $\{b(m,n)\}$ by computing it as the product of the FFT's of $\{c(m,n)\}$ and $\{d(n)\}$ and taking advantage of symmetry to reduce by one half the number of 1-D row FFT's needed to compute the 2-D FFT of $\{c(m,n)\}$.

A third and more sophisticated step would be to use the above two steps and also change $\mathcal{E}_s$ to:

$$\mathcal{E}_s = \sum_{m,n} [c(m,n) - c^+(m,n)]^2. \tag{20}$$

The solution to which the algorithm would converge would guarantee the stability of $\{c(m,n)\}$, but not $\{d(n)\}$. However, $\{d(n)\}$ is a 1-D filter and could be stabilized by "pole flipping" [7]. This third step saves computation time, because to compute the numerical derivative it is necessary to do a complete spectral factorization

Text must not extend below this line

ALL MATERIAL IN THIS SPACE MUST BE ENTERED

as each parameter is perturbed. This step reduces the number of spectral factorizations per derivative calculation by P. Furthermore, the support of $\{c(m,n)\}$ is smaller than that of $\{b(m,n)\}$ so problems with aliasing should be reduced.

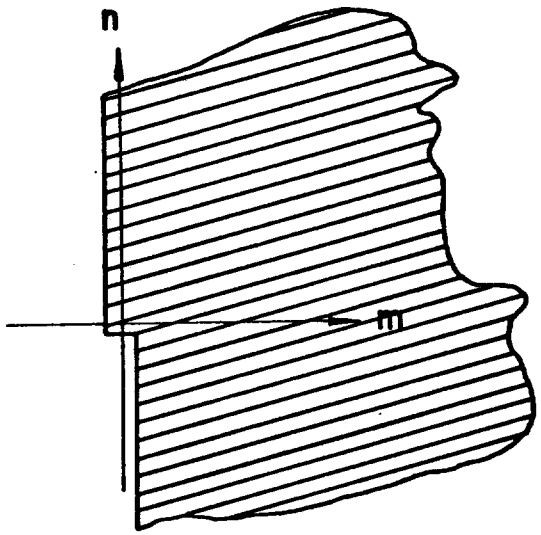

FIGURE 1

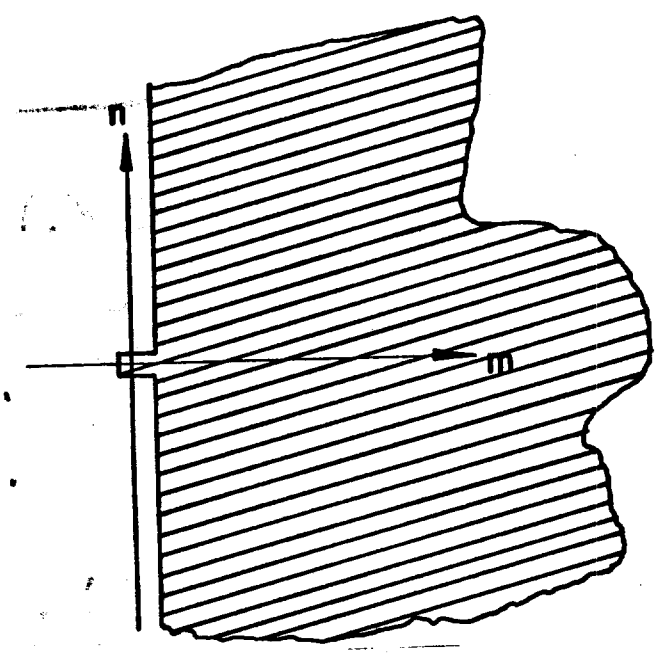

FIGURE 2

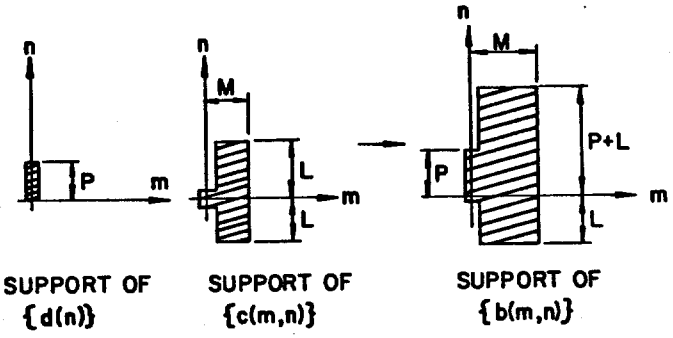

FIGURE 3

REFERENCES

1. M. P. Ekstrom and J. W. Woods, "Two-Dimensional Spectral Factorization with Applications in Recursive Digital Filtering," IEEE Trans, ASSP, pp. 115-128, April 1976.

2. P. Karivaratharajan and M. N. S. Swamy, "Quandrantal Symmetry Associated with Two-Dimensional Digital Transfer Functions," IEEE Trans. Circuits and Systems, Vol. CAS-25, pp. 340-343, June 1978.

3. D. M. Goodman, "The Stability and Design of Two-Dimensional Recursive Filters," Ph.D. Thesis, U.C. Berkeley, December 1977.

4. D. M. Goodman and M. P. Ekstrom, "Multivariable Spectral Factorization and Unilateral Autorogressive Models," IEEE Trans. Auto. Control, Vol. AC-25, pp. 258-262, April 1980.

5. R. K. Kajan and M. M. S. Swamy, "Symmetry Constraints on Two-Dimensional Half-Plane Digital Transfer Functions." IEEE Trans. ASSP, pp. 506-512, October 1979.

6. M. P. Ekstrom, R. E. Twogood, and J. W. Woods, "Two-Dimensional Recursive Filter Design - A Spectral Factorization Approach," IEEE Trans ASSP, pp. 16-26, February 1980.

7. K. Steiglitz, "Computer-Aided Design of Recursive Digital Filters," IEEE Trans. Audio Electroacoust. pp. 123-124, June 1970.

ALL MATERIAL IN THIS SPACE WILL BE DELETED