UCID- 18587

PRACTICAL ASPECTS OF RF ACCELERATION FOR MFE INJECTION

G. W. Hamilton and J. H. Fink*

June 3, 1980

Lawrence Livermore Laboratory

This is an informal report intended primarily for internal or limited external distribution. The opinions and conclusions stated are those of the author and may or may not be those of the Laboratory.

Work performed under the auspices of the U.S. Department of Energy by the Lawrence Livermore Laboratory under Contract W-7405-Eng-48.

*Westinghouse Electric Corporation

CIRCULATION COPY
SUBJECT TO RECALL
IN TWO WEEKS

DISCLAIMER

This document was prepared as an account of work sponsored by an agency of the United States Government. Neither the United States Government nor the University of California nor any of their employees, makes any warranty, express or implied, or assumes any legal liability or responsibility for the accuracy, completeness, or usefulness of any information, apparatus, product, or process disclosed, or represents that its use would not infringe privately owned rights. Reference herein to any specific commercial product, process, or service by trade name, trademark, manufacturer, or otherwise, does not necessarily constitute or imply its endorsement, recommendation, or favoring by the United States Government or the University of California. The views and opinions of authors expressed herein do not necessarily state or reflect those of the United States Government or the University of California, and shall not be used for advertising or product endorsement purposes.

This report has been reproduced
directly from the best available copy.

Available to DOE and DOE contractors from the
Office of Scientific and Technical Information
P.O. Box 62, Oak Ridge, TN 37831
Prices available from (615) 576-8401, FTS 626-8401

Available to the public from the
National Technical Information Service
U.S. Department of Commerce
5285 Port Royal Rd.,
Springfield, VA 22161

PRACTICAL ASPECTS OF rf ACCELERATION FOR MFE INJECTION

by

G. W. Hamilton and J. H. Fink*

ABSTRACT

We have considered several practical aspects of rf acceleration (by a MEQALAC accelerator, for example) of positive and negative ions for MFE neutral injection. We have analyzed the beam transport, gas flow, differential pumping, and compatibility with MFE beam lines. We find that rf acceleration has several advantages over dc acceleration, especially if high energy (over 100 keV) and/or high purity (over 99%) is required. Therefore rf acceleration should be considered especially in connection with negative ions, which also have competitive advantages under such requirements.

Beam densities for rf may be lower than dc beam densities because of space charge limitations and electrode transparency. However, the overall dimensions of an rf system are competitive with or smaller than the dimensions of a dc system of equal current and voltage because the gas pumping and electrical insulation are included within the rf electrode assembly. Ion source development is required to produce an array of many small beams suitable for injection into a MEQALAC.

INTRODUCTION

We have considered the practical aspects of neutral injection into magnetic fusion energy (MFE) devices using rf acceleration by a MEQALAC[1] rather than by a dc accelerator. The most obvious advantages are the elimination of high voltages required to produce beams of several hundred keV and the purity of ion beams accelerated by rf without parasitic components of electrons and molecular ions. Beam transport of small individual beamlets by a lattice of quadrupole electrodes makes several problems associated with neutral injection more tractable. The beam transport system can be utilized to solve problems related to differential pumping, disposal of undesired beam components, neutron shielding, and electrode heating.

*Westinghouse Electric Corporation

In this report we will consider only the use of rf acceleration with negative ions for MFE injection. Other techniques, using dc acceleration have been considered in previous reports.[2] We will emphasize the practical aspects of this technology from the point of view of the user.

The enclosed Brookhaven National Laboratory (BNL) abstract and sketches describe the MEQALAC accelerator, with an example showing how certain MFE injection requirements may be satisfied by a multi-channel rf accelerator operating within the limitations of beam space charge. The space charge limitation has been analyzed by BNL with the result that the time-averaged beam current of each channel is about 7 mA regardless of the absolute dimensions of the beam channel if the relative dimensions and voltages are properly optimized. Consequently the overall beam density can be increased by using small dimensions, subject to the characteristics of the ion source.

It is appropriate to consider rf acceleration in connection with negative ions for MFE injection, because both technologies have competitive advantages when either high energy or high beam purity is required. It is straightforward to increase the energy of an rf accelerator by addition of accel stages. The advantages of rf acceleration over dc acceleration are significant in the energy range above 100 keV. At lower energies rf acceleration may also be preferred if beam purity is important. The rf accelerator will separate the D^- or D^+ from parasitic components such as electrons, molecular ions, and impurities.

BEAM TRANSPORT

After extraction from the high-pressure D^- ion source the beam must somehow be transported to the low-pressure accelerator. Most suitable for an interface with the multi-channel MEQALAC accelerator is a lattice of electrostatic quadrupoles transporting each of the beamlets by strong focusing. In this region the beam energy will be determined by the ion-source extraction voltage (20 to 30 keV); therefore, we will use the term Low Energy Beam Transport (LEBT).

The LEBT must be designed in such a way that gas from the ion source will flow through the electrode lattice to adjacent regions where cryopanels or some other type of pumping is located. Figure 1 and Fig. 2 show the location of the LEBT relative to the ion source, accelerator, and cryopanels. The LEBT must be designed such that the gas pressure is reduced from about 10^{-2} Torr

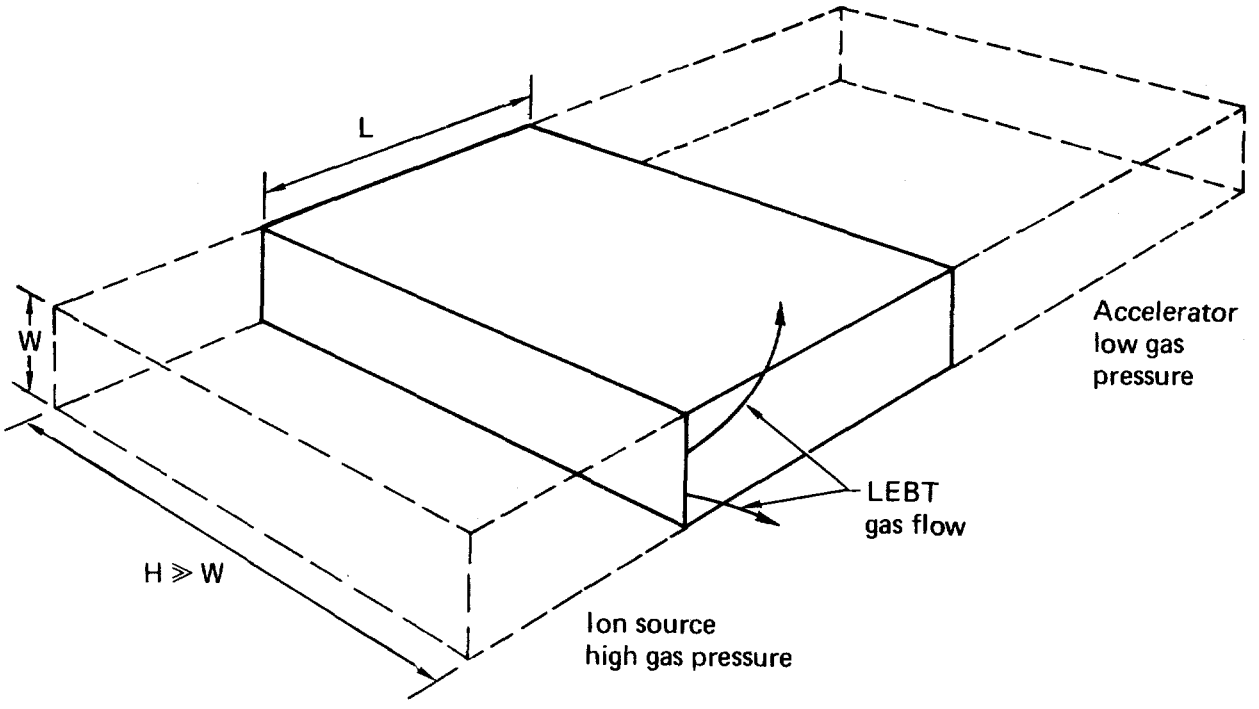

Fig. 1. Low Energy Beam Transport (LEBT) as an interface between the high pressure ion source and the low-pressure accelerator. Gas from the ion source must flow in two directions through the LEBT to the pumping region.

to less than 10^{-5} Torr, while the beam loss due to gas collisions within the LEBT must not be excessive.

A beam buncher (not shown by Figs. 1 and 2) should be located between the LEBT and Meqalac to convert the dc extracted beam to a bunched beam for rf acceleration. The buncher may occupy only a few centimeters at a frequency of about 100 MHz.

Since the electrostatic focusing is dc, the LEBT will transport parasitic components (electrons, molecular ions, and impurities) extracted from the ion source with the D^- or D^+. Parasitic components must be suppressed primarily by the ion source and finally by the rf accelerator, which is tuned to accelerate only one mass-to-charge ratio. Electrode cooling must be adequate to remove the heat deposited by the parasitic components and the other types of beam losses.

One possibility for electron suppression is to apply a transverse magnetic field to the LEBT. The magnetic field strength of about .01 Tesla will deflect the 20-keV electrons but will not perturb the 20-keV ions because the v x B force on the ions is much smaller than the electrostatic focusing forces.

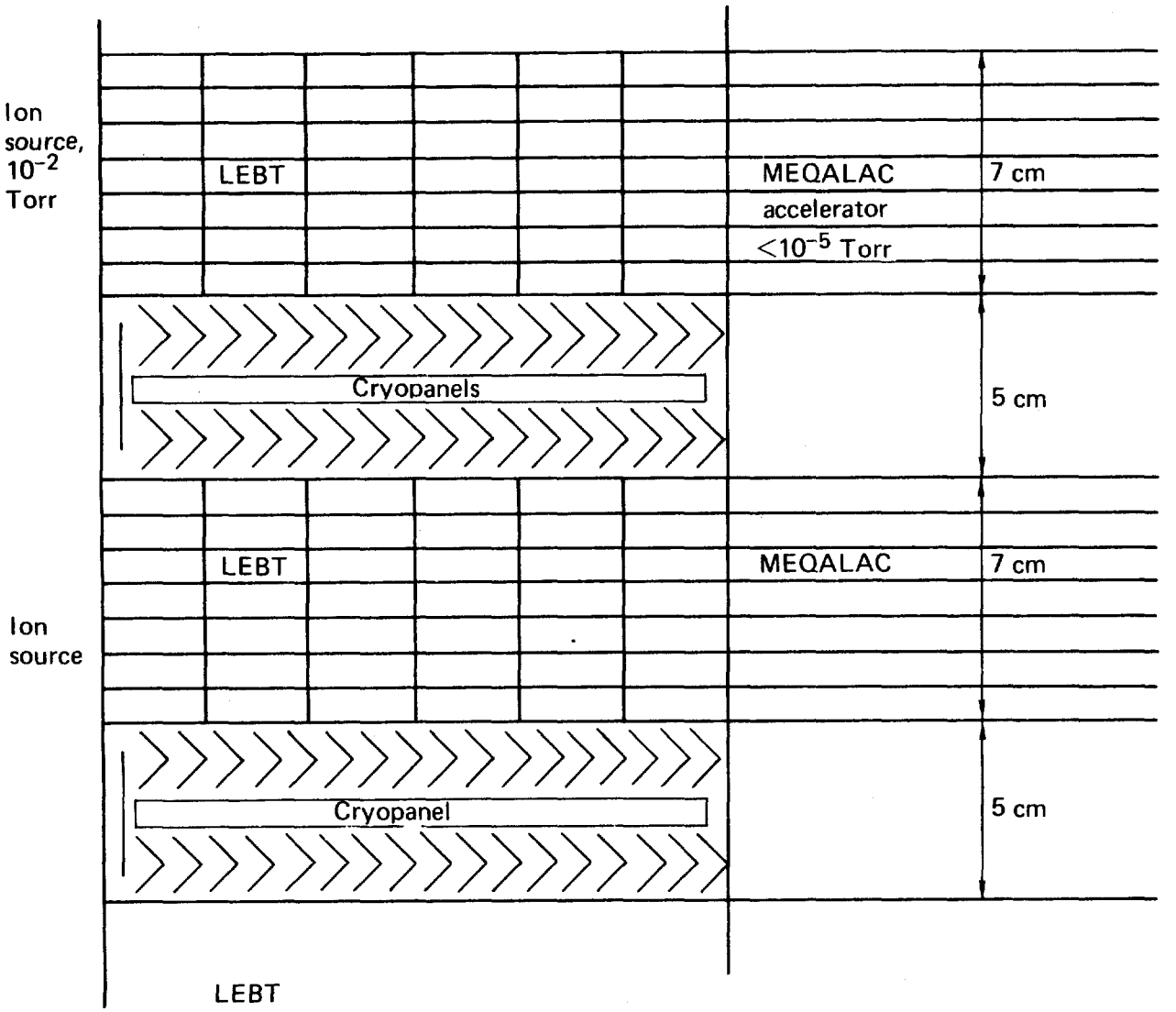

Fig. 2. An example of cryopanels sandwiched between layers of LEBT.

FLOW AND DIFFERENTIAL PUMPING IN THE LEBT

A two-dimensional gas flow computation[3] is required to design the LEBT such that differential pumping will be achieved without excessive beam loss by gas collisions. The cross-sections for collisional stripping of D^- or electron capture by D^+ are roughly 10^{15} cm^{-2} in the energy range 20 to 30 keV. Therefore the integrated gas thickness, $\int ndy$, must be not much larger than 10^{14} molecules/cm^2. We have performed this computation and are therefore able to specify the required dimensions (length and width) of the LEBT, if other LEBT conditions are determined by the characteristics of the ion source and beam optics.

We have solved analytically the two-dimensional gas flow equation $F = -\tilde{K}\nabla n$, which is valid if the mean free path of the gas molecules is larger than the spacing between electrodes. The analytic solution can be evaluated for many different input conditions to find the conditions fulfilling the gas requirements.

Figure 3 and Figure 4 are examples of the results of the gas flow computations. Figure 3 shows the contours of gas density within the LEBT. The integrated gas thickness $\int n dy$ is shown by Figure 4, as a function of the width, W, of the LEBT and the coordinate x.

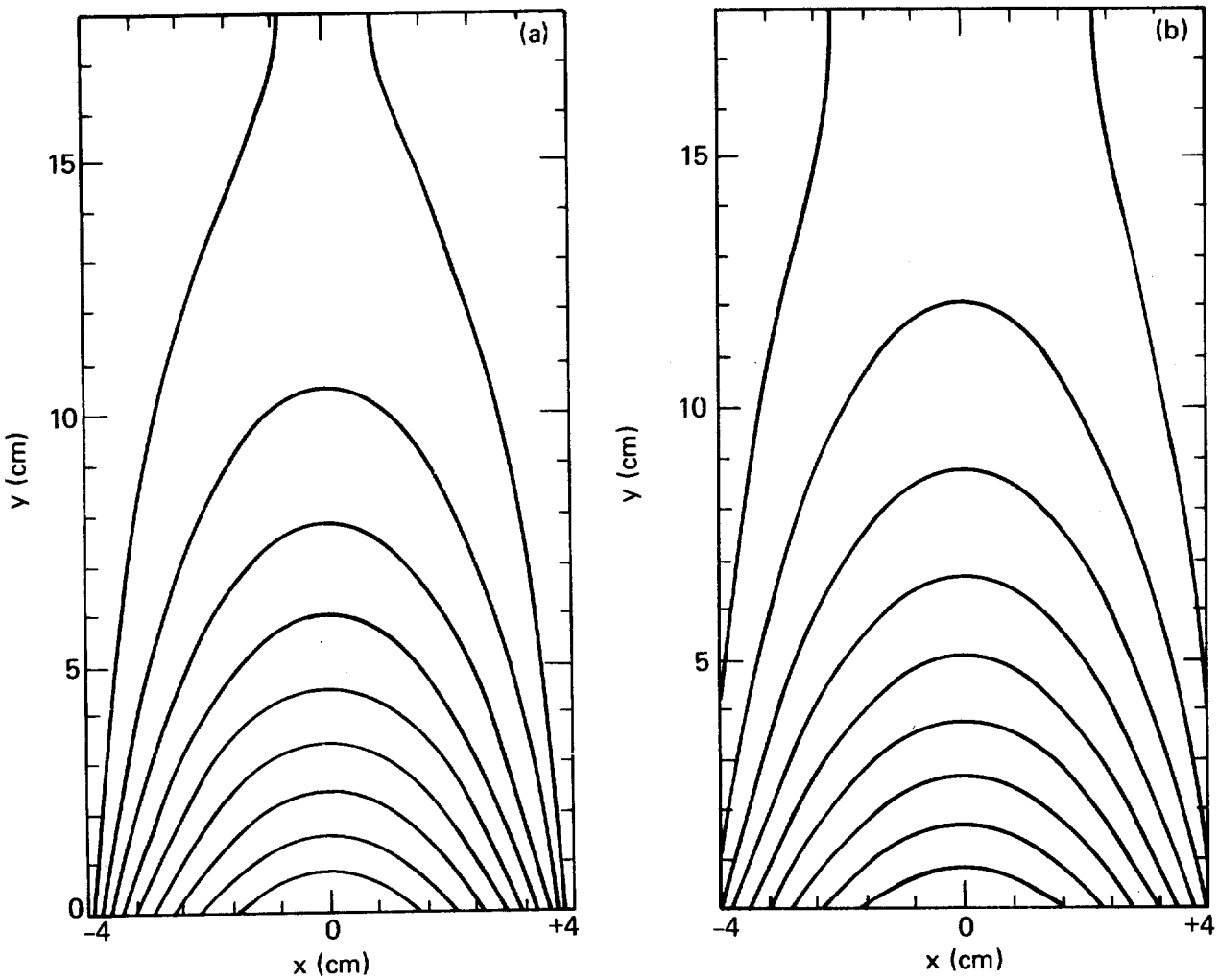

Fig. 3. Contours of gas density computed by gas flow through the LEBT electrode lattice. The gas load at the ion source is determined by the beam density and the gas efficiency. Two different boundary conditions are assumed at the pumping volume: (a) constant pressure, and (b) constant pumping speed of cryopanels.

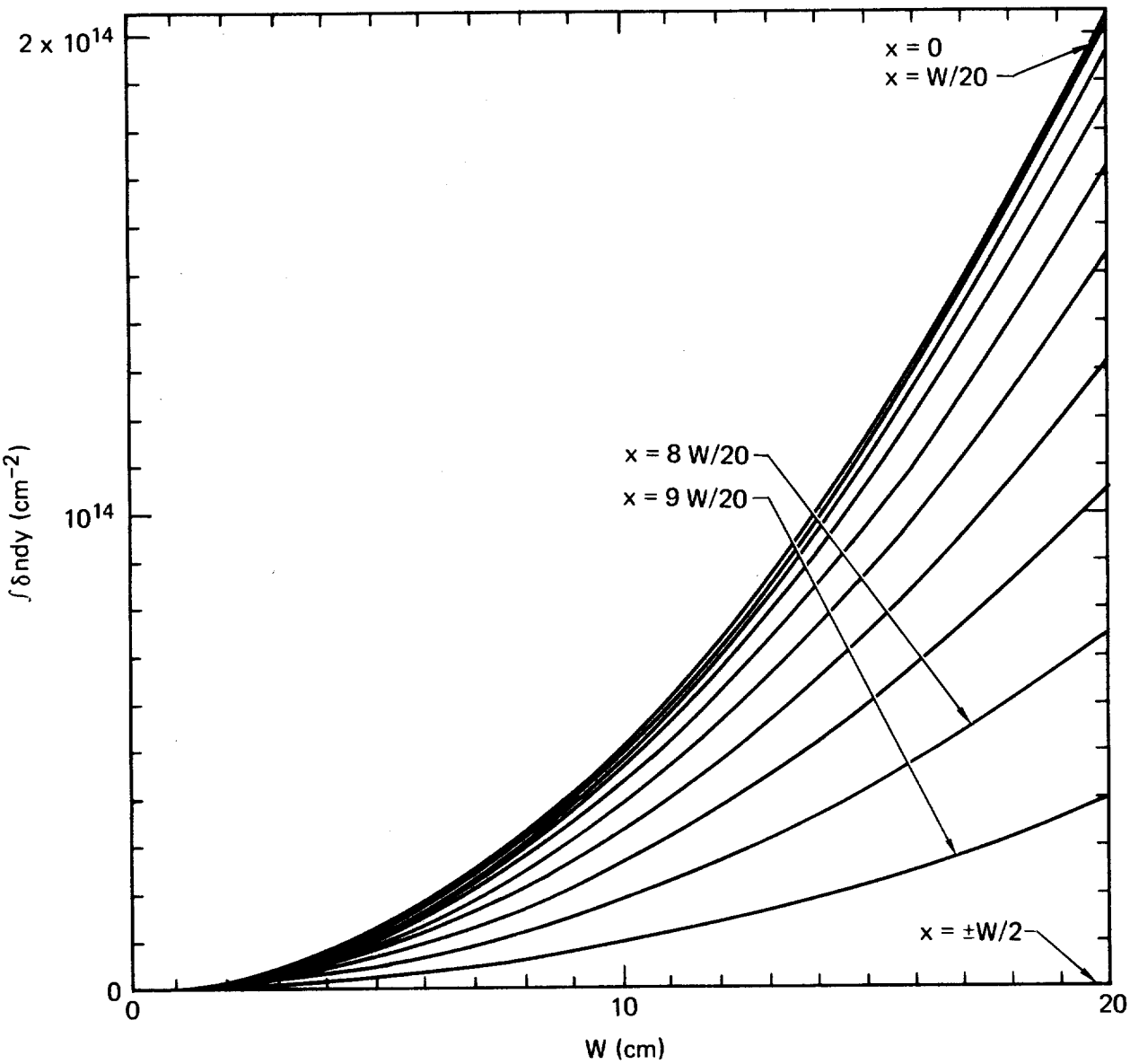

Fig. 4. Integrated gas thickness $\int ndy$ as a function of the width, W, and the coordinate, x.

Input conditions required for the gas flow computations consist of the gas load from the ion source, the gas conductivity, $\tilde{K}$, for gas flow through the electrode lattice in the x and y directions, and the boundary conditions at the interfaces with the pumping regions and the MEQALAC accelerator. The gas load depends upon the extracted beam density and the source gas efficiency. The gas conductivity, $\tilde{K}$, depends upon the transparency and spacing of the LEBT electrode lattice which is not isotropic in the x and y directions

Results of the gas flow computations indicate a severe constraint for the allowable width, W, of the LEBT lattice. For practical conditions W must be

not greater than 2 to 8 cm. Therefore the LEBT must be built as several layers separated by cryopanels or some other type of pumping. Figure 2 shows an example of such an assembly.

Table 1 shows an example of gas flow conditions satisfying the requirements and consistent with the computation. The beam loss due to electron stripping is 27% for this example. This is tolerable because the space-charge limit for a dc beam transported by the LEBT is much larger than the space-charge limit of the rf MEQALAC. However, the ion source must put out the extra beam current and the LEBT electrodes must be cooled adequately for the heat deposited by the 20-keV D^o.

ELECTRODE COOLING

Heat will be deposited on the LEBT electrodes by the neutral products of gas collisions and perhaps by electrons. The beam current extracted from the ion source must be about 12 mA/channel so that 6 mA survive after losses by bunching, collimation, and gas collisions. The heat load per channel will be about 120 W, most of which will be deposited within the first few centimeters of the LEBT. This will be transferred by thermal conduction to water-cooled heat sinks on the boundary of the LEBT. A heat transfer computation shows that this can be accomplished if the quadrupole electrodes are mounted on a copper sheet 1 mm thick attached to 3 mm water tubes at intervals of 2 cm. By coincidence, the 2 cm spacing required for heat transfer is consistent with the 2 cm width required for gas flow. We have considered the heat limitations associated with thermal expansion and also with melting of the copper.

The heat load will be much smaller after the high pressure gas and electrons are removed in the LEBT. Therefore, the cryopanels and the water cooling possibly need not be built into the accelerator structure. Cooling and pumping must be provided outside the accelerator assembly to provide for the heat and gas load created by the buncher and by the final suppression of parasitic components.

TRANSITION BETWEEN LEBT AND MEQALAC

To economize on space, the beam can be transported by electrostatic quadrapoles to form a more compact assembly after the cryopanels and water cooling are no longer needed. Figure 5 shows how the overall dimensions of the

Table 1. An example of gas flow conditions satisfying LEFT requirements.

Beam current per channel	6 mA (after losses)
Spacing between channels	4 mm
Average current density within LEBT	37.5 mA/cm^2
Gas efficiency of D^- ion source	10%
Grid transparencies for gas conductance	
G_x	0.30
G_y	0.35
Spacing between electrodes for gas conductance	
S_x	4 mm
S_y	12 mm
Length L of LEBT	18 cm
Width W of LEBT	2 cm
Maximum gas density at ion source	1.6×10^{14} molecules/cm^3 = 5×10^{-3} Torr
Maximum gas density at accelerator	1.2×10^{10} molecules/cm^3 = 4×10^{-7} Torr
Maximum integrated gas thickness, $\int ndy$	3.0×10^{14} cm^{-2}
Beam loss = $1 - \exp(-\sigma \int ndy)$	27%
Pumping speed of cryopanels	7 liters/s-cm^2 = 7000 cm/s
Width of cryopanels including baffles	5 cm
Width of water cooling, both sides of LEBT	1 cm
Module size for 4-A D^- beam	2×54 cm^2
Overall size of 5 modules with 6 cryopanels, 20 A	45×54 cm^2
Overall size of 5 modules without cryopanels or water cooling	10×54 cm^2

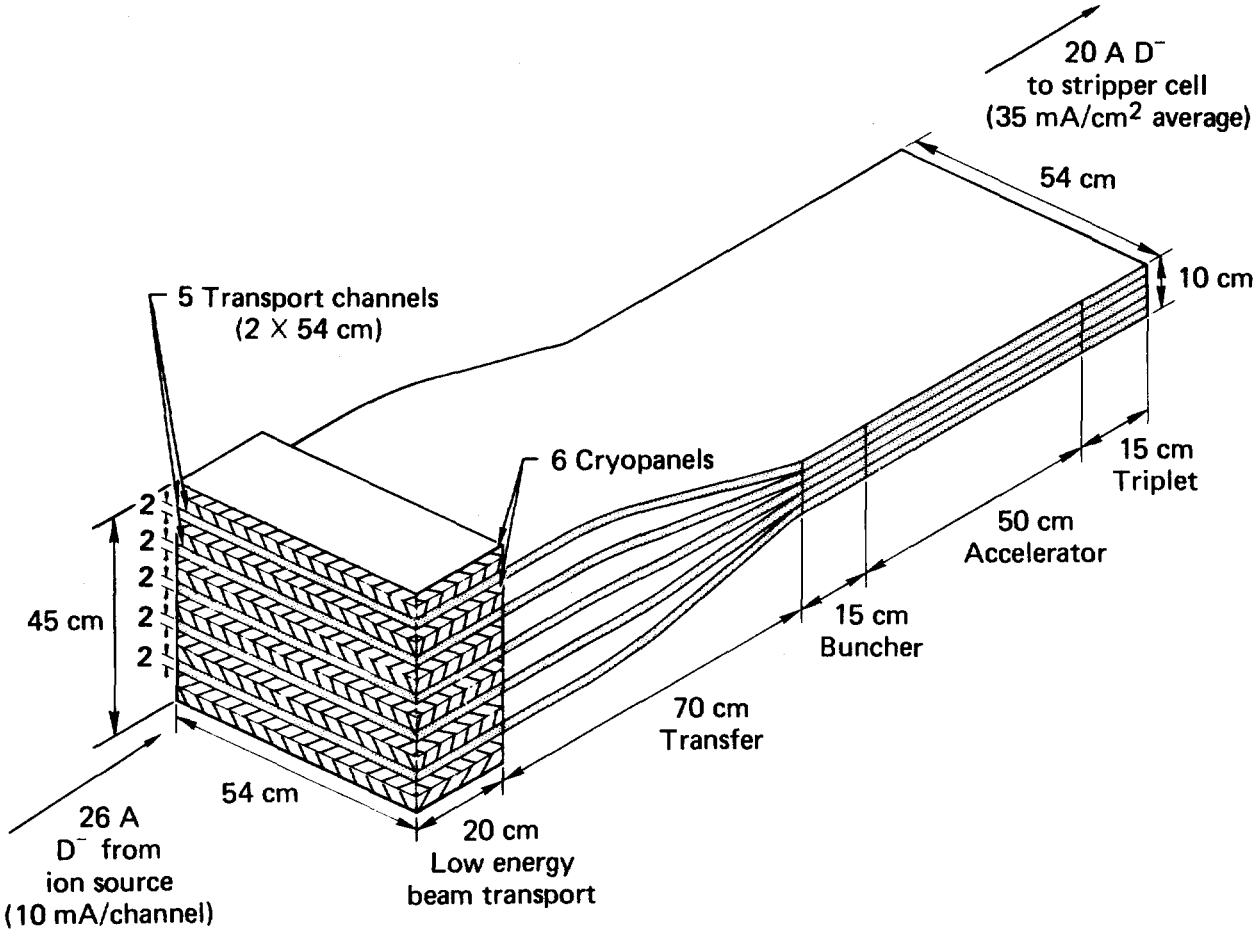

Fig. 5. MEQALAC assembly including a transition section to reduce the beam dimensions after the cryopanels and water cooling in the high-pressure LEBT are no longer required.

assembly can be reduced from 45 x 54 cm to 10 x 54 cm by guiding the beamlets electrostatically in a gentle S-curve. In this layout, the S-curve occupies only 70 cm. The S-curve has been laid out with a 200 cm minimum radius of curvature. This is compatible with quadrupole guidance since the centrifugal force is very small in comparison with the strong focusing forces.

BEAM LINE COMPONENTS

The beam optics of the buncher, accelerator, and triplet lens are under design at BNL and are, therefore, not the purpose of this report. The acceptable beam divergence, v_x/v_y, will be about ± 0.03 radian in the low energy (20 keV) section of the beam line. This will be reduced inversely in

proportion to velocity to about 0.01 radian after acceleration. The triplet lens following the accelerator will transform the phase space occupied by the beamlets to minimize the transverse velocity and will focus each beamlet to a cross-over point at the entrance to the MFE device.

One of the beam optics requirements to be resolved is the alignment tolerance, which we assume to be 3% for misalignment between adjacent electrodes. Thermal expansion of the LEBT electrode mountings has been designed accordingly. However, the overall alignment of the assembly will have a much larger tolerance.

The quadrupole beam transport gives the beam designer the option of specifying the maximum acceptable divergence, v_x/v_y, in the high-pressure section of the LEBT before the beam is accelerated to high energy. This option relieves the problems of high-power beam collimators in high-vacuum regions.

After acceleration, the beam will pass through a stripping cell and a bending magnet or electrostatic field to separate the neutral beam from the positive and negative ions emerging from the stripping cell. These components and their pumping systems are described in our other injection studies.[2]

Table 2 shows the space requirement of each component of the beam line. This space requirement includes the space occupied by cryopanels and electrical insulation and is therefore competitive with or better than the space occupied by a high voltage dc system.

The beam will drift about 5 meters from the triplet lens to the cross-over point located at the entrance to the MFE device. If the beam divergence is ± 0.01 radian the beam cross-section at the cross-over will be about ± 5 cm in each direction. The overall neutral beam intensity will be 22 mA/cm^2 at the stripping cell or 120 mA/cm^2 at the cross-over point.

OSCILLATOR EFFICIENCIES

High-power oscillators operating in the required frequency range of 50 MHz or higher have been developed for TV transmission, rf accelerators, and other applications. Wide-band oscillators typically operate at efficiencies of 50-60%. This can be improved by circuit design to about 70% merely by taking advantage of the single-frequency requirement of the MEQALAC. The most straightforward approach to a 4 MW oscillator would consist of about 40 large triodes connected in parallel to supply the low-impedance, heavily-loaded

Table II. Space requirements for a 20-A, 200-keV MEQALAC injection system using negative ions.

Component	Dimensions (cm)		
	Length	Width	Height
5 D^- ion sources, 26 A total	20	54	35
LEBT, including cryopanels	20	54	45
Transfer section (S-curves)	70	54	35
Buncher	15	54	10
Accelerator	50	54	10
(20 A, 200 keV or more)			
Triplet	15	54	10
Stripping cell, including its pumping, 60% neutralization			
12 A, 2.4 MW neutral beam.			
Inside dimensions	100	54	10
Outside dimensions	100	80	50
Charged Beam Disposal, magnetic or electrostatic, including beam dumps and pumping.			
1.6 MW for 200 kV	300	80	100 to 300, depending on design.
Total length of beam line	590		

MEQALAC. A more advanced design, perhaps capable of higher efficiency and higher frequency, would be based on the Meqatron[4] (proposed by BNL) or the Gyrocon[5] (reported by Novosobirsk).

NEUTRON SHIELDING

Existing ion sources are not designed to operate in a radiation environment and will require neutron shielding to operate with a DT reactor. Ceramic magnets are probably the most vulnerable ion source component. It is not obvious whether neutron shielding is compatible with conventional beam lines, which must be open to particles traveling in straight lines.

The many small electrodes of the MEQALAC and the beam transport will effectively shield the ion source from neutrons if the integrated thickness of metal is at least 50 cm. Neutron shielding will be improved by water cooling within the electrode lattice.

CONCLUSIONS

Radio frequency acceleration of negative or positive ions offers significant advantages over dc acceleration in respect to high voltage insulation, beam purity, differential pumping, beam transport, and neutron shielding. Beam current densities are lower for rf beams than for dc beams because of the more severe space-charge limitations and the 30% transparency of the electrode lattice. However, the overall dimensions of the rf system are competitive with or smaller than the dimensions of a dc system because the pumping system and electrical insulation are included within the electrode assembly.

Radio frequency acceleration should be considered especially in connection with negative ions because both technologies have competitive advantages over the alternatives if high energy (more than 100 keV) and/or high beam purity (more than 99%) is required. Ion source development is required to produce a large array of small beams (about 10 mA, 20 kV) compatible with MEQALAC acceptance requirements.

REFERENCES

1. J. Fink, J. Alessi, and A. W. Maschke, "Eliminating High Voltage from High Energy Neutral Beam Injectors via MEQALAC," Abstract submitted to 1980 IEEE International Conference on Plasma Science (1980). Also, A. W. Maschke, "MEQALAC: A New Approach to Low Beta Acceleration," Brookhaven National Laboratory, Report BNL-51029 (1979).
2. For example, see G. W. Hamilton, J. L. Erickson, and J. H. Fink, "End Plug Neutral Beams," in Tandem Mirror Reactor with Thermal Barriers, UCRL-52836 (1979).
3. G. W. Hamilton and P.A. Willmann, Two-Dimensional Gas Flow in an Electrode Assembly, UCID-18568 (1980).
4. A. W. Mashke, "The MEQATRON: A High-Power High-Frequency RF Source," Brookhaven National Laboratory Report BNL-51094 (1979).
5. G. I. Budker et al, "The Gyrocon--An Efficient Relativistic High-Power VHF Generator," Particle Accelerators 10, 41 (1979).

EO/sc