3.0 WORKSPACE, STORAGE, AND WORKSHOP DESIGN

3.1 Workspace and operations in non-workshop areas

3.1.1 Workspace

3.1.1.1 General Maintenance clearance. To provide adequate clearance for maintainers and to provide sufficient space to accommodate tools, test equipment, procedures, and other job aids during an in-place repair, a nominal 914 mm (36 in.) maintenance clearance should be provided around all major system components and piping of 610 mm (24 in.) diameter and larger.

3.1.1.1 Console floor space. Whenever feasible, free floor space of at least 1.22 m (48 in.) should be provided in front of consoles used by maintenance personnel. For equipment racks that require maintenance, free floor space should be provided in accordance with the criteria given below.

3.1.1.2. Depth of work area. Clearance from the front of the rack to the nearest facing surface or obstacle should not be less than 1.07 m (42 in.). Where wheelchair accessibility is desired, 1.22 m (48 in.) should be used as a minimum. The minimum space between rows of cabinets should be 200 mm (8 in.) greater than the depth of the deepest drawer (equipment) (See also Figure 3.1.1, Depth of work area).

3.1.1.3 Lateral workspace. The minimum lateral work space for racks having drawers or removable equipment should be as follows (measured from the drawers or equipment in the extended position):

a. For racks having drawers or removable items weighing less than 20 kg (44 lb): 460 mm (18 in.) on one side and 100 mm (4 in.) on the other.

b. For racks having drawers or removable items weighing over 20 kg (44 lb): 460 mm (18 in.) on each side.

3.1.1.4 Space between rows of cabinets. The minimum space between rows of cabinets should be 200 mm (8 in.) greater than the depth of the deepest drawer or cabinet.

3.1.1.5 Change in position. Workspace should allow the technician to change posture if the maintenance task being performed requires prolonged kneeling, crawling, or crouching.

3.1.1.6 Wheelchair access. When wheelchair accessibility is required, a clear floor space at least 762 mm (30 in.) by 1219 mm (48 in.) should be provided to allow either a forward or parallel approach by a person using a wheelchair. The required reach envelope should be from 381-1219 mm (15-48 in.) above the floor. Hardware for accessible storage spaces should be operable with one hand and should not require tight grasping, pinching, or twisting of the wrist. The force required to use this hardware should not exceed 22 N (5 lb). Touch latches and U-shaped pulls are acceptable.

3.1.1.7 Space adjacent to live electrical parts. When the work space is adjacent to live electrical parts with up to 150 volts that may require examination, adjustment, servicing, or maintenance, a minimum clearance of 3 feet shall be provided. This distance shall be measured from the live parts if they are exposed or from the enclosure front or opening if the live parts are enclosed. For higher voltages, the clearance shall conform to OSHA standard 29 CFR 1910, as applicable. When voltages are greater than 150 volts, that voltage should be specified.

Administrative Information Only

3.1.1.8 Surface materials to provide traction. Non-skid treads, expanded metal flooring, or abrasive coatings should be provided on all surfaces which may be used for walking, climbing, or footholds.

3.1.1.9 Handles. Handles on cabinets and consoles should be recessed whenever practicable to eliminate projections on the surface. If handles cannot be recessed, they shall be designed so that they shall neither injure personnel nor entangle clothing or equipment. (5.7.1.2) The design placement of handles should be based on ergonomic optimization for the human hand and strength envelopes, and the task to be undertaken.

3.1.1.10 Storage space. Adequate and suitable space shall be provided on consoles or immediate work space for the storage of manuals, worksheets, tools, and other materials that are frequently used by the maintenance or operator personnel or other materials that are emergency related.

Figure 3.1.1 Depth of work area.

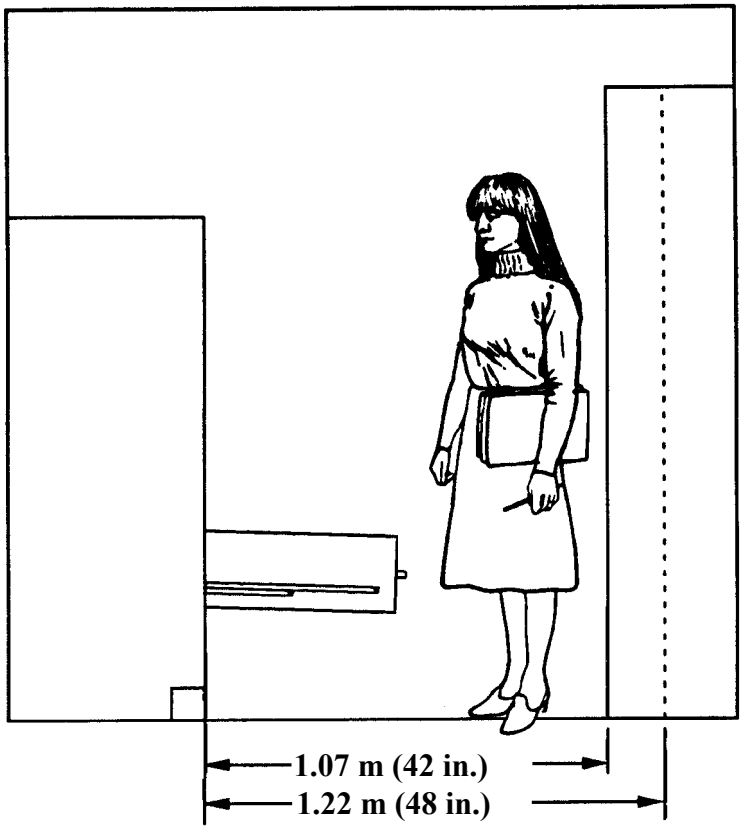

3.1.1.11 Materials to be provided. To assist the technician in performing the required maintenance, the following should be provided at the workplace whenever practical.

a. Auxiliary hooks, holders, lights, outlets, etc.

b. Auxiliary stands/shelves built into equipment to support test equipment, removable units, or items to be repaired.

Administrative Information Only

c. Lattice work, low cabinets, mirrors, open space, etc. as necessary to allow observation of related displays, moving parts, fasteners, test points, etc.

d. Communication aids.

3.1.2 Standing Operations

3.1.2.1 Requirements for standing work space and clearance. Whenever possible, workspace design should allow routine, frequent, and/or short-term maintenance to be performed from a standing position.

3.1.2.2 Visual and manipulation workspace requirements

3.1.2.2.1 Display placement, normal

Visual displays mounted on vertical panels and visual displays used in normal equipment operation shall be placed between 1.04 m (41 in.) and 1.78 m (70 in.) above the standing surface. On all panel configurations, the angle from the center of the display face plane to the line of sight should be 45° or greater from the typical working position. The displays should be within the upper limit of the visual field of the 5th percentile female, e.g. 75° above the horizontal line of sight. [Assume an eye height of 1.435 m (56.5 in.)].

3.1.2.2.2 Display Placement, Special

Displays requiring precise and frequent reading shall be placed so that the center of the display shall be between 1.27 m (50 in.) and 1.65 m (65 in.) above the standing surface.

3.1.2.2.3 Control Placement, Normal

All controls mounted on a vertical surface and controls used in normal equipment operation shall be located between 860 mm and 1.780 m (34 and 70 in.) above the standing surface. Or where there is appreciable depth, all controls shall be located within the reach radius of the 5th percentile female [approximately 640 mm (25.2 in.)]. Controls shall be between 76 and 635 mm (3 and 25 in.) from the front edge of the console [the 76 mm (3 in.) limit protects against accidental activation].

3.1.2.2.4 Control Placement, Special

Control Controls requiring precise or frequent operation and controls for emergency shall be mounted between 860 mm and 1.35 m (34 and 53 in.) above the standing surface and no farther than 530 mm (21 in.) laterally from the center line marking the operator's normal or most frequent standing position.

Administrative Information Only

3.1.2.3 Work clearances. Work clearances for standing operations are provided below.

	Minimum	Preferred
a. Horizontal Clearance (passing) 813 mm (32 in.)	508 mm (20 in.)	813 mm (32 in)
b. Overhead clearance:	1960 mm (77 in)	2010 mm (79 in)
c. Maximum overhead reach		1803 mm (71 in)
d. Maximum depth of reach		584 mm (23 in)
e. Standing Space when working opposite console/rack	1067mm (42 in)	1022 mm (48 in)
f. Kick space	104 mm (4 in)	

3.1.3 Seated operations

3.1.3.1 Seating Compatibility. Work seating should provide an adequate supporting framework for the body relative to the activities that must be carried out. Chairs to be used with sit-down consoles should be designed to be operationally compatible with the console configuration.

3.1.3.2Work surface dimensions. Work surface dimensions for seated operations are provided below.

(1) Width 760 mm (30 in.), minimum

(2) Depth 400 mm (16 in.), minimum

(3) Height 690-790 mm (27-31 in.), range

3.1.3.3 Adjustable surfaces for seated operations. When the surface has multiple users with wide variations in height, adjustable furniture should be considered. The minimum height value for adjustable desk, writing table, adjustable keyboard support surfaces, etc. should be 585 mm (23 in.) or lower; the upper range should be at least 710 mm (28 in.).

3.1.3.4 Writing surfaces for seated operations. Where a writing surface is required on equipment consoles, it should be a least 400 mm (16 in.) deep and 610 mm (24 in. wide, or consistent with maintenance personnel reach requirements.

3.1.3.5 Display placement for seated operations. All displays should be mounted so that they are within the upper limit of the visual field: 75˚ above the horizontal line of sight of the 5th percentile female [assume an eye point height of 1.06 m (42 in.)] so that the angle from the line of sight to the display face plane is 45˚ or greater (there is no lower limit for a plausible sit down console design). Generally, the lateral display placement should not exceed the optimal lateral viewing zone which extends 15˚ beyond the center point.

3.1.3.7 Control placement for seated operations. Controls should be placed 76.635 mm (3-25 in.) from the front edge of the console. Control height should be such that control actuation does not require more than a 638 mm (25 in.) reach by the console operator sitting in the normal working position (e.g. for the 5th percentile female operator).

Administrative Information Only

3.1.4 Requirements for mobile work space. When technicians are required to work or pass through limited spaces, appropriate clearances should be selected from those provided in Figure 3.1.2, Mobile workspace dimensions.

Figure 3.1.2. Mobile workspace dimensions.

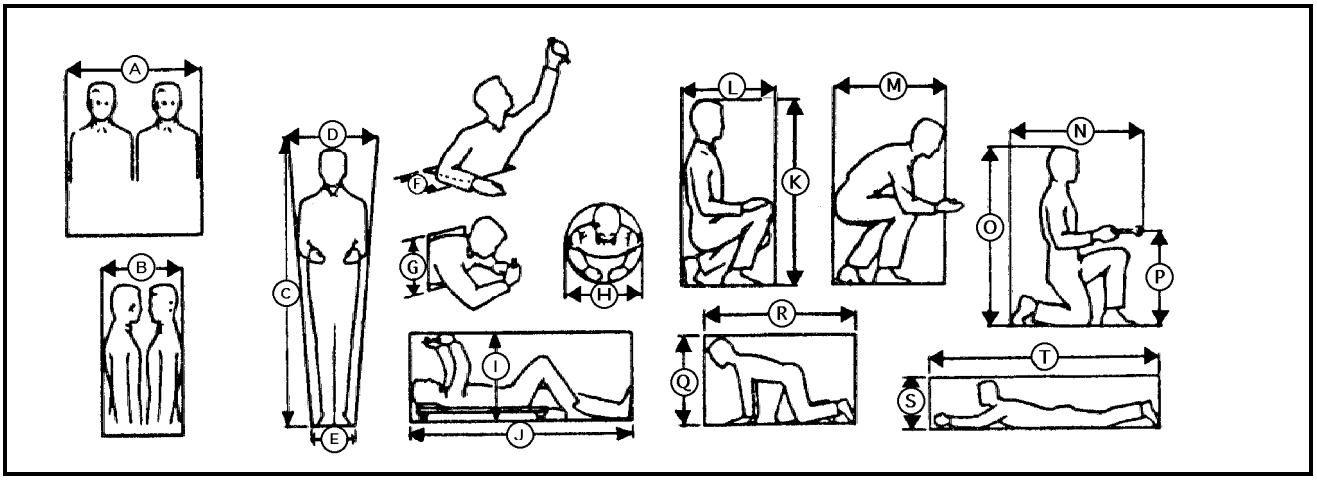

Type of Dimension	Min.	Best	Suited	Type of Dimension	Min.	Best	Suited
A. Two men passing abreast	1.07 m (42 in.)	1.37 m (54 in.)	1.52 m (60 in.)	Squatting work space			
				K. Height	1.22 m (48 in.)	--------	1.30 m (51 in.)
				L. Width	0.69 m (27 in.)	0.91 m (36 in.)	1.02 m (40 in.)
B. Two men passing facing	0.76 m (30 in.)	0.91 m (36 in.)	0.91 m (36 in.)	Optimum display area		0.69-1.09 m (27-43 in.)	
				Optimum control area		0.48-0.86m (19-34 in.)	
Catwalk dimensions				Stooping work space			
C. Height	1.60 m (63 in).	1.96 m (77 in.) for erect	2.01 m (79 in.) walking	M. Width	0.91 m (36 in.)	1.02 m (40 in.)	1.12 m (44 in.)
D. Shoulder width	0.56 m (22 in.)	0.61 m (24 in.)	0.81 m (32 in.)	Optimum display area		0.81-1.22 m (32-48 in.)	
E. Walking width*	0.30 m (12 in.)	0.38 m (15 in.)	0.38 m (15 in.)	Optimum control area		0.61-0.99 m (24-39 in.)	
F. Vertical entry hatch (round or square)	0.46 m (18 in.)	0.56 m (22 in.)	0.81 m (32 in.)	Kneeling work space			
				N. Width	1.07 m (42 in.)	1.22 m (48 in.)	1.27 m (50 in.)
				O. Height	1.42 m (56 in.)	---------	1.50 m (59 in.)
				P. Optimum work point		0.69 m (27 in.)	

Administrative Information Only

Type of Dimension	Min.	Best	Suited	Type of Dimension	Min.	Best	Suited
G. Horizontal entry hatch				Optimum display area		0.71-1.12 m (28-44 in.)	
Shoulder width	0.46 m (18 in.)	0.56 m (22 in.)	0.81 m (32 in.)			0.51-0.89 (20-35 in.)	
Height	0.38 m (15 in.)	0.51 m (20 in.)	0.61 m (24 in.)	Optimum control area			
H. Crawl through pipe (round or square)	0.64 m (25 in.)	0.76 m (30 in.)	0.81 m (32 in.)	Kneeling crawl space			
				Q. Height	0.79 m (31 in.)	0.91 m (36 in.)	0.97 m (38 in.)
				R. Length	1.50 m (59 in.)	----------	1.57 m (62 in.)
Supine work space				Prone work or crawl space			
I. Height	0.51 m (20 in.)	0.61 m (24 in.)	0.66 m (26 in.)	S. Height	0.43 m (17 in.)	0.51 m (20 in.)	0.61 m (24 in.)
J. Length	1.85 m (73 in.)	1.92 m (75 in.)	1.98 m (78 in.)	T. Length	2.44 m (96 in.)	----------	----------

*OSHA standard 1910.23(C)(2) requires using a 0.45 m (18 in.) minimum for catwalk runways special consideration (larger access) must be given when personnel may be wearing bulky or protective clothing referred to as "Suited".

3.1.4.1 Movement of equipment and materials through aisle ways. Passageway dimensions should reflect sizes of equipment and materials that personnel will move through the aisles.

3.1.4.1.1 Requirements for major equipment. As part of plant design, the removal path for all major pieces of equipment should be defined and documented in prints and drawings. These paths include aisles, hatches, doors, knockout walls, removable components, elevators, ramps, as well as handling devices such as permanent and temporary cranes, chain falls, skids, and vehicles. Handling and mounting requirements should be described and dimensions and weights of equipment should be combined with the handling devices to evaluate the removal envelope and the handling capacity of elevators.

3.1.4.2 Vehicular movement through aisle ways. Aisle ways used by vehicles should be sized to accommodate the dimensions of the vehicle, its load, and any personnel who may have to accompany the load. Aisle way size should allow for vehicle turning radius and variations in load width, length, and placement.

3.1.4.3 Doors. The same considerations used to determine aisle way size should be applied to determining door size. Security constraints for leaving certain doors open should also be considered.

3.1.4.3.1 Doorway curbs. Where doorway curbs may impede vehicular or equipment movement ramps should be available and may be built in if they will not interfere with traffic passing by the doorway. Door height should be checked to ensure that the curb does not cause overhead clearance problems.

3.1.4.4 Roof access. Where applicable such as when HVAC systems, elevator machinery rooms, or instrumentation are located on the roof, roof access should be provided for maintenance personnel that allows efficient movement of necessary personnel and equipment to the applicable area. Use of elevators is recommended although stairs may be acceptable. Use of ladders alone is generally inadequate.

Administrative Information Only

3.1.5 Access and egress safety

Standards relating to access and egress safety are listed below. For additional standards related to ladder, catwalk, platforms, and railings see Section 3.10, Stair ladder and ramp design for maintainers of this document.

3.1.5.1 Fixed, safe access provisions. Fixed, safe access provisions, such as fixed ladders, catwalks, and platforms should be provided for equipment that requires recurrent maintenance.

3.1.5.2 Temporary, safe access provisions. Where equipment maintenance is infrequent, clearances should be provided for erecting temporary access provisions such as portable ladders and scaffolding rather than relying on ad-hoc access provisions.

3.1.5.3 Protective railings. Protective railings should be provided on open-sided floors, platforms, or other elevated walking or work surfaces that can create a drop of four feed or more. Exceptions are entrances to ramps, stairways, and fixed ladders.

3.1.5.4 Open holes in pathways. Open holes in pathways that can cause tripping or ankle-turning should be covered. Where temporary openings occur due to floor plug removal, temporary railings should be available to guard against falling.

3.1.5.5 Fall protection devices. Fall protection devices should be used when personnel must work at elevations where falls can cause injury or fatality. Examples of such devices are personnel nets, body belts and lanyards, retracting lifeline devices, climbing safety devices, and controlled descent devices.

3.1.5.6 Placement of outlets. Outlets for all of the services should be available immediately adjacent to each row or island of equipment and placed so that hoses, cables, or lines are not run across an aisle. Outlets for any one service should not be placed more than 15.2 m (50 ft) apart and should have multiple outlets at each location.

3.1.5.7 Drainage provisions. Drainage provisions should be provided to maintain walking and climbing surfaces free of slippery substances e.g., oil, water, and ice.

3.1.5.7.1 Location of floor drains. Floor drains should be located so that draining, flushing, and washdown activity does not require running drain hoses across the aisles or permit water or other liquids to flow into traffic areas.

3.1.5.7.2 Floor surface shape. Floor surfaces should be shaped so that equipment spills are directed toward the nearest drain and away from pathways.

Administrative Information Only

Figure 3.1.3. Fall protection devices.

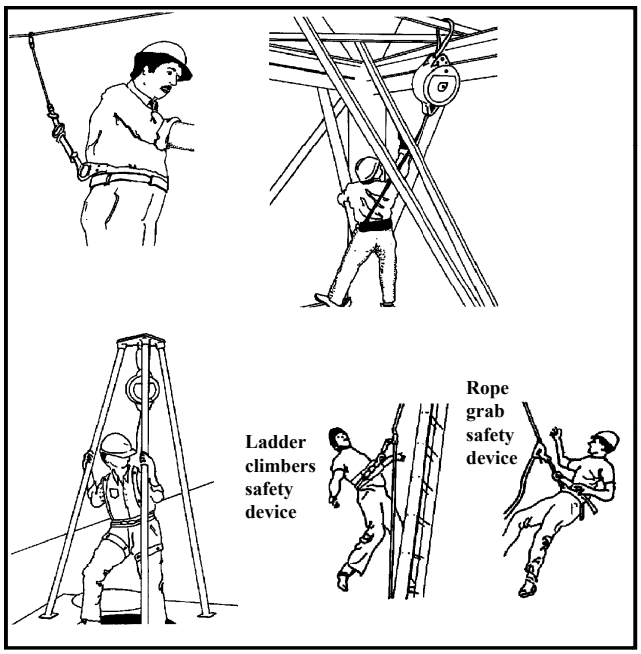

3.1.5.7.3 Barriers. Barriers or other containment features should be provided to prevent spills from reaching pathways or passing from one plant level to another.

3.1.5.7.4 Emergency drainage systems. Emergency drainage systems should be provided to direct flammable or other hazardous liquid leakage to a safe location.

3.1.5.8 Walking surfaces. Nonskid walking and climbing surfaces should be provided to minimize slipping or falling accidents.

3.1.5.9 Unobstructed pathways. Maintain aisles and pathways free of obstacles and obstructions that can serve as head knockers or cause physical contact injuries.

3.1.5.9.1 Use of cages and flags. Cages, flags, or highlighting should be used to protect against potentially injurious projections or obstacles in pathways including moving equipment parts.

3.1.5.10 Avoid injurious contact with hazardous environmental factors. Safeguards should be provided to prevent injurious contact with hot surfaces, radiological materials, exhaust fumes, dangerous chemicals, and venting steam.

3.1.5.11 Avoid injurious contact with vehicles. Safeguards should be provided to prevent injuries to personnel when vehicles and personnel share the same pathways and intersections through the plant. The safeguards include use of:

a. Clearly marking pathways and crossways to alert personnel to vehicular traffic.

b. Corner mirrors.

Administrative Information Only

c. Rotating beacons while vehicles are in motion.

d. Auditory alarms when vehicles are backing up.

3.1.5.12 Exits. Well-marked exits should be provided to permit prompt and safe evacuation of plant personnel in the event of an emergency. Exits should be marked by readily visible, suitably illuminated exit signs with plainly legible letters no less than 152 mm (6 in.) high. Supplementary means such as audible signals and battery powered lighting should be provided, as needed, to locate exits under emergency conditions.

3.1.5.12.1 Two means of egress. At least two means of egress remote from each other should be provided in potentially hazardous areas where maintenance personnel may be endangered by the blocking of a single means of egress due to fire, smoke, or escaping hazardous liquids.

3.1.6 Conveniences for maintainers. Maintainers should be provided with adequate eating, break-time, and locker facilities, as well as sleeping facilities where applicable.

3.2 Facility design for work in radiological areas

See also Section 3.4, radiological areas, in this document

3.2.1 Equipment and facilities in radiological areas. Equipment located in radiological areas should be designed to accommodate maintenance technicians wearing protective clothing including allowing for decreased manual dexterity because of protective clothing. The designs for facilities and equipment which are located in radiological areas should optimize speed of maintenance operations to minimize stay times and associated exposure levels. The following factors should be used in conjunction with optimization methods as mandated by 10CFR835.1002, “Occupational Radiation Protection” (Radiation Safety).

3.2.1.1 Modularization and oversized components. Since doing intricate electrical work with gloves is difficult more emphasis should be placed on modularization and the use of oversized nuts, bolts, and other components.

3.2.1.2 Broader ladder rungs. Since feet are less sensitive in boots and tripping is more likely, ladders should have broader rungs.

3.2.1.3 Lift and movement aids. To minimize personnel exposure, lift and movement aids should be provided. Examples of such aids are monorails, fixed-beam hoist points, hand trucks, dollies, carts, and portable lifts. Interruptions to smooth rolling should be avoided at the entrance.

3.2.1.4 Tools and remote handling equipment. Long-handled tools, remotely operated controls, remote handling equipment, and similar approaches should be used where feasible to separate maintenance technicians from radiological sources to the maximum extent possible.

3.2.2 Traffic routes. Traffic routes near radiation sources or through potentially radiologically contaminated portions of the facility should route personnel away from radiation exposure sources as much as possible.

3.2.3 Entry/egress points. Egress points from a contamination zone should allow placement of a trash barrel for disposable waste; a trash barrel for washable waste; and a table for survey meters, tapes, gloves, bags, and paperwork. Allowance should also be made for space on both sides of the access point for

Administrative Information Only

adding, changing, or removing protective clothing, surveying personnel and equipment, and bagging contaminated equipment. Doorways and aisles should be widened at points of anticipated high traffic to prevent bottlenecks.

3.2.4 Access openings. Access openings associated with equipment in radiological areas should be sited to allow convenient and speedy entry and exit by technicians who span the anthropometric range while being burdened by protective clothing.

3.2.5 Use of permanent or fixed access. Permanent or fixed access provisions should be available to equipment which is located in radiological work areas to reduce radiation exposure incurred by erecting temporary accesses, e.g., scaffolding, shielding.

3.2.6 Barrier protection. Barrier protection varying from simple distance from hot equipment to block walls and lead blankets or sheathing should be used to minimize exposure.

3.2.7 Radiological spaces. Radiological spaces should be formally designated within nuclear facilities at different levels of buildings. (See also Section 3.4, Radiological Workshops)

3.2.8 Dual train systems. Dual train systems should be separated so that work on an idle train is not performed in the radiation field coming from the running train. System placement should take into account permanent and temporary shielding and its effect on repair and replacement activities.

3.2.9 Piping systems in radiological areas. Piping systems in radiological areas should be routed to accommodate men physically encumbered by protective garments, air bottles, and face masks or plastic hoods. Reach rods should only be used where direct access to the valves will result in a personnel exposure or other adverse environmental condition significantly exceeding that obtained by manual operation.

3.2.10 Drainage. Drainage should be away from aisles, walkways, and open areas to prevent spreading contamination. Drains should be placed close to equipment that may leak or require cleaning and equipment drains should run all the way to a floor drain to avoid adding contamination to, or spreading existing contamination on, the floor.

3.2.11 Control and storage of contaminated debris. Control and storage of contaminated debris, work aids, spare parts, etc. should be adequate to prevent hindrance to the mobility of personnel and vehicles.

3.2.11.1 Storage for contaminated equipment and stores used during outages. Storage provisions for contaminated equipment and stores used during outages should be adequate to prevent these items from obstructing normal passageways for personnel and vehicles.

3.2.12 Decontamination station. A tool decontamination should be established for the maintainer's use. It should be equipped with solvents, bags, and other aids to facilitate decontamination.

3.2.13 Space for auxiliary contamination control equipment. Normally contaminated work areas or facilities should be sited and configured to allow ample room for radiological waste barrels, step-off pads, contaminated clothing collection barrels, cordon stands, etc.

3.2.14 Use of remote viewing techniques. Remote viewing techniques such as closed circuit TV should be considered for coordinating maintenance activities with a minimum of exposure to radiation on the part of those who support maintenance, i.e., operators, QC inspectors, etc.

Administrative Information Only

3.2.15 Direct viewing. Use of viewing provisions (that reduce radiation exposure) in normally opaque shielding walls should be considered to protect personnel who oversee maintenance work.

3.2.16. Protective clothing. Facilities should be available to ensure an adequate supply of clean, decontaminated protective clothing, especially during peak workload periods (e.g., laundering facilities for washable gear, storage facilities for issue of one-time use disposable gear). In the event of contamination, protective clothing, air packs , etc. should be reachable without exposing operators and maintenance personnel to toxic or contaminated air.

3.2.16.1 Design of protective clothing. Protective clothing and associated gear should be designed to withstand multi-stress environments, e.g., heat and radiation, fire and other hazards.

3.2.17 Procedures. Procedures or other maintenance information sources should be readily available to the technician working in contaminated areas. Where procedures and forms must make the transition from "contaminated" to "clean," copies should be used so that contaminated paper stays behind.

3.2.18 Training. Both in-house and contractor personnel assigned to work in radiological areas should receive sufficient training, including mockup rehearsals, to ensure maximum task performance and minimum stay times.

3.3 Workshops

3.3.1 General principles for workshops

Workshop requirements. The requirements for clean workshops vary somewhat according to function depending on whether the maintenance activities being supported are mechanical, electrical, Instrument and control, auxiliary, or some combination of the above. The guidelines reported below are generic in nature and are modified for a specific type of shop by subguidelines where applicable. Guidelines for a remaining category of workshop, radiological workshops, are provided in Section 3.4, Hot workshops, of this document.

3.3.1.1 Workshop location. Maintenance workshops should be located and integrated into the overall facility layout in a manner that minimizes the time required for maintenance personnel to go back and forth between the shops and work areas within the facility.

3.3.1.2 Workshops in multiunit facilities. In multiunit facilities, where units contain different major systems, separate maintenance organizations and workshops should be available for each unit.

3.3.1.3 Support facilities for outside contractor personnel. The facility should offer convenient spaces and support facilities for temporary or permanent outside contractor personnel.

3.3.1.4 Storage. Lockers or cabinets should be available for personal storage so that workbenches and seats stay free of clutter.

3.3.1.5 Availability of movement and lifting aids. Appropriate cranes, monorails, forklifts, carts, and other movement aids should be available within the workshop to allow for moving of heavy equipment and hardware.

Administrative Information Only

3.3.2 Layout and relationship to other activities

3.3.2.1 Entry and exit routes. Entry and exit routes through the maintenance workshops should be maintained free of curbs, protrusions or other impediments for the passage of personnel, carts, vehicles, and moving and lifting devices.

3.3.2.2 Large equipment access. A minimum size of 2.44x2.44 m (8 ft x 8 ft) for equipment access doors is recommended for machine and electrical shops, which may require entry of vehicles such as fork lift trucks. For I&C shops a 1.83 m (6 ft) wide entry may be adequate.

3.3.2.2.1 Motor driven door. A motor-driven, roll-up door is recommended for ease of use and minimal interference with traffic, Because of considerations such as front-load extension of forklifts actuation should be hand operated rather than by a floor plate. Manual operation of roll-up doors should not require a lift force exceeding 110 N (25 lb-f).

3.3.2.2.2 Double swing door. A double swing door may also be used effectively with one side usable for personnel and small equipment.

3.3.2.3 Dedicated personnel entries. Dedicated personnel entries separate from large equipment entries should be provided to avoid opening larger doors for personnel use. This is particularly important when the door opens out on noisy or climatologically different environments. These doors should have windows.

3.3.2.3.1 Width for personnel doors. For mechanical and electrical shops the recommended width is 1.22 m (4 ft) (to accommodate small equipment vehicles as well as personnel) with 0.91m (3 ft) being the minimum width. For I&C shops, a common equipment and personnel door may be used (e.g. a double door 1.83 (6 ft) wide.)

3.3.2.3.2 Door handle. When used, such as for doors to the outside of the building, to avoid slipping a lever or bar grip with thumb latch is recommended over a ball-knob handle, clearing the door jamb by at least 102 mm (4 in.)

3.3.2.3.3 Door swing clearance. When doors swing to open, a complete door swing clearance of at least 135˚ is recommended with a swing of 180˚ being preferred to assure complete movement clearance. Doors should swing into the shop to avoid corridor passage interference Automatic closure with a kick doorstop option is recommended.

3.3.2.3.4 Automatic door operation. When small equipment and load carrying personnel frequently pass through the door, a motor-drive door should be used to ease entry. Door actuation should be by a floor pressure plate, light beam interruption, or similar device rather than by hand. In case of failure, such systems should provide for immediate manual backup and should remain open or stop movement if contact with an object occurs free-swing, push-to-open door with a padded door bumper may also be used and is particularly useful when personnel pushing hand trucks or carrying a load with both hands. When this free-swing type of door is used an automatic controlled door swing and a kick doorstop are recommended. Swinging doors should have clear markings on the floor to caution safety clearance margin such as a yellow caution line.

3.3.2.3.5 Sliding doors. When used, Sliding doors should have enclosed retraction plenums to prevent accidental blockage.

Administrative Information Only

3.3.2.4 Main aisle ways. Main aisle ways through the shop leading to large component work areas should be at least 1.83 m (6 ft) wide. Aisle ways which may have to support traffic from large vehicles such as forklifts should be at least 3.04 m (10 ft wide).

3.3.2.5 Secondary aisle ways. Secondary aisle ways for general access (e.g. personnel and small movement aids such as carts and handtrucks) should be at least 0.91 m (3 ft) wide with 1.22 m (4 ft) recommended.

3.3.2.6 Machinery clearance. A 0.91 m (3 ft) clearance should be provided for an operator and small-part handler and a minimum of 1.52 m (5 ft) aisle width between machines.

3.3.2.7 Welding and grinding clearance. A minimum of 1.83 m (6 ft.) clearance should be provided around the welder with OSHA standards defining the requirements for ventilation and barriers.

3.3.2.8 Workshops areas not a thoroughfare. Workshop areas should not be used as major thoroughfares for all facility personnel.

3.3.2.9 Location of tool room. The tool room should be integrated within the maintenance shop area or be in proximity to the shop area.

3.3.2.10 Location of warehouse. The warehouse should be located close to the maintenance workshop.

3.3.2.11 Instrument and control facilities. Instrument and control facilities should be located near the control room.

3.3.2.12 Health physics facilities. Health Physics facilities should be located as conveniently as possible for maintenance technicians so delays in making transitions from "clean" to "hot" areas and vice versa can be avoided.

3.3.3 Environmental conditions

3.3.3.1 Proper environmental conditions. Maintenance workshops should provide proper environmental conditions in accordance with 19CFR1910.

3.3.3.1.1 Maintenance activities generating noxious byproducts. Maintenance activities that generate heat, smoke, sparks, or noxious odors should be conducted in separated, screened-in, and well-ventilated areas.

3.3.3.1.2 Noise shielding. Maintenance workshops should be properly shielded from plant noise.

3.3.3.1.3 Draft free. Workshops should be designed to be free of drafts that may cause discomfort or affect the availability of maintenance technicians to maintain close tolerances in operating plant machinery.

3.3.3.1.4 Comfort. Thermal/humidity environment within the workshop should be maintained at a comfortable level year round.

3.3.4 Workbenches. The type of tasks for which workbenches are used vary from the clean, detailed work of the I & C shop to the heavy duty, often dirty work of the mechanical shop. Some jobs may require access from more than one side. Workbench design includes bench height, surface characteristics,

Administrative Information Only

normal usage (standing, sitting), space and access provisions for parts and tools, power outlets, lighting, clearances for legs and feet, drawers. The most common configuration is the use of stand-up benches accompanied by stools to reduce fatigue associated with long tasks. Guidelines for workbenches are listed below.

3.3.4.1 Stand-up workbenches. The higher stand-up bench reduces back-strain caused by bending over lower-level surfaces and makes access easier to test and equipment carts which are about the same height.

Workbench dimension for standing positions should conform to the following dimensions (keyed to Figure 3.3.1, Standard design for stand-up benches).

a. Height of Test equipment shelf: 1.40 - 1.65 m (55 - 65 in.)

b. Height of desk surface: 914-1016 mm (36-40 in., 36 in. recommended) above the floor

c. Width: 762 mm (30 in.) maximum

d. D. Length: As required by tasks.

3.3.4.1.1 Low height, stand-up workbenches. Where access to the top of components is difficult using the standard stand-up workbench, a bench with height comparable to the sit-down workbench (e.g. 711 - 762 mm (28 - 30 in.)) may be a good solution.

3.3.4.1.2 Podium type stand-up workbenches. Podium type workbenches or high precision surfaces should have the following dimensions (dimensions are keyed to Figure 3.3.2, Podium type workbench design):

a. Height of working surface: 762-1016 mm (30-40 in.) above floor

b. Width: 914 mm (36 in.) maximum

c. Length: 1118 mm (44 in.) maximum.

d. Height of visual display or item being manipulated: 1.78 m (70 in.) maximum

Administrative Information Only

Figure 3.3.1. Standard design for stand-up benches.

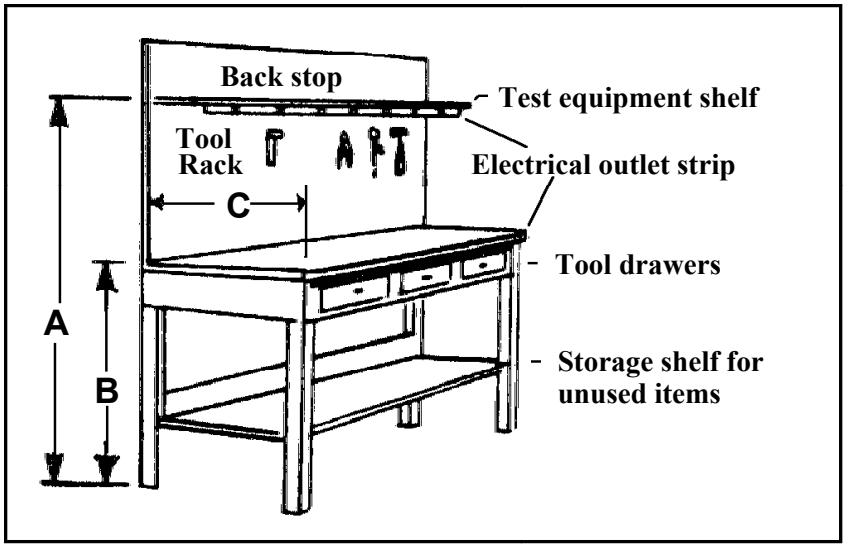

Figure 3.3.2. Podium type workbench design.

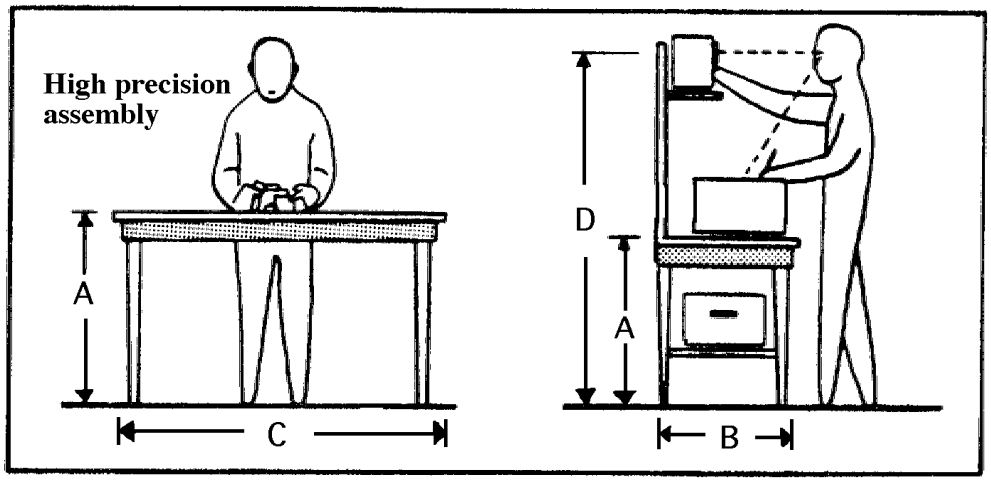

3.3.4.1.3 Stools for stand-up workbenches. Stools should be provided to reduce fatigue during long tasks. The configuration and recommended dimensions for stand-sit stools are shown below (See Figure, 3.3.3.) Other recommended features for the stand-sit stool are listed below:

a. Because stools are often moved around a quick access, easy adjustment of seat height is recommended.

b. Adjustable back rest with firm, padded support.

c. Footrests should be provided (this may be accomplished but use of a circular bar).

d. Wheels or casters should not be used.

Administrative Information Only

e. Fabric covers which allow air circulation and are less prone to cracking and tearing are preferred to plastic covers.

Recommended dimensions (given below) are keyed to the Figure 3.3.3, Stand-sit stool:

a. Seat diameter: Approx. 381 mm (15 in.)

b. Stool back seat support and height: 178 - 254 mm (7 - 10 in.)

c. Back support height: 152 - 203 mm (6 - 8 in.)

d. Seat height (adjustable): To 762 mm (30 in.)

e. Footrest to seat: 457 mm (18 in.)

f. Footrest diameter: 457 mm (18 in.)

Figure 3.3.3. Stand-sit- stool

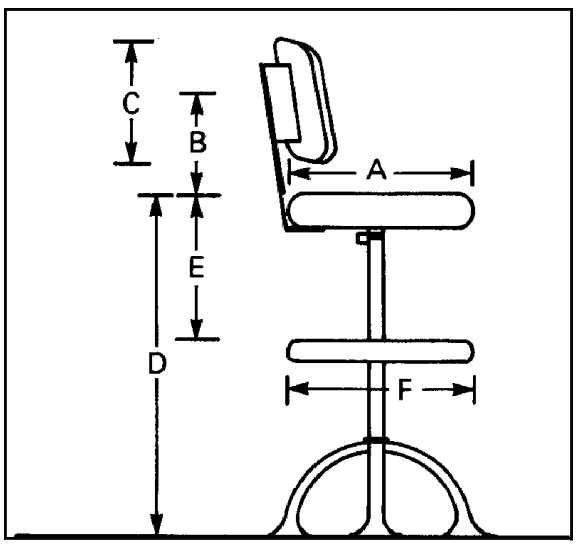

3.3.4.1.4 Surface heights for stand-up desks. Recommended workbench height for differing functions are as follows:

a. Work surfaces for supporting job instruction manuals, worksheets, and other reading materials should be 914 mm (36 in.) above the floor.

b. For tasks requiring force, it is recommended that work surfaces be 914 mm (36 in.) above the floor.

c. It is recommended that tasks requiring precision be done on surfaces 1016 mm (40 in.) above the floor.

Administrative Information Only

3.3.4.2 Sit-only workbench. The sit-down, desk type workbench which offers comfort and reduced fatigue for long tasks that require detailed work, should have the following dimensions (keyed to the Figure 3.3.4, Sit- only workbenches).

a.	Table depth:	711 - 762 mm (28 - 30 in.)
b.	Table height:	711 - 762 mm (28 - 30 in.)
c.	Foot insert clearance height*	102 mm (4 in.)
d.	Foot insert clearance depth*	152 mm (6 in.)
e.	Seated leg insert width clearance (min.):	660 mm (26 in.)
f.	Seated thigh vertical clearance:	660 mm. (26 in.)

*Foot insert clearance provided for standing on all sides.

Figure 3.3.4. Sit-only workbench

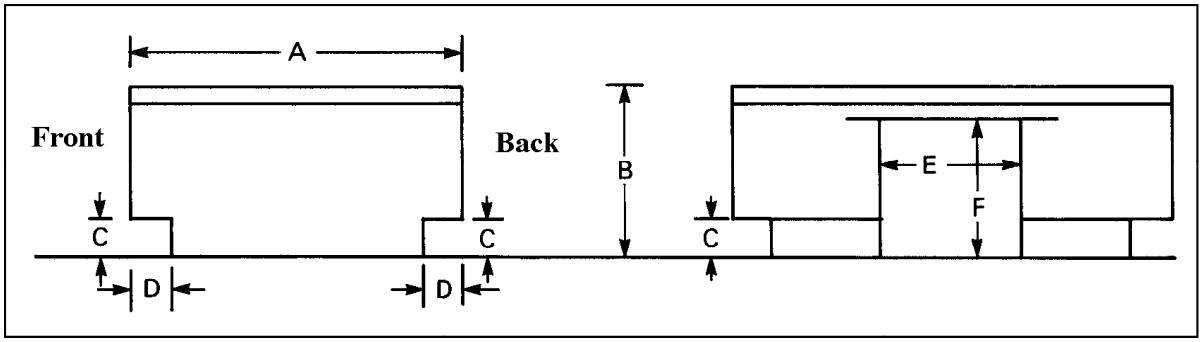

3.3.4.2.1 Stools for sit-only workbenches. Recommendations for stools for sit only workbenches are similar to those for stand-up benches except that seat height should be adjustable from 15 to 21 in. and the requirement for footstool height should be adjusted accordingly.

3.3.4.3 Double-sided workbenches. Double-sided workbench and workbench accessories configuration should be as illustrated in Figure 3.3.5, Double-sided workbench design and workbench accessories.

Figure 3.3.5. Double-sided workbench design and workbench accessories

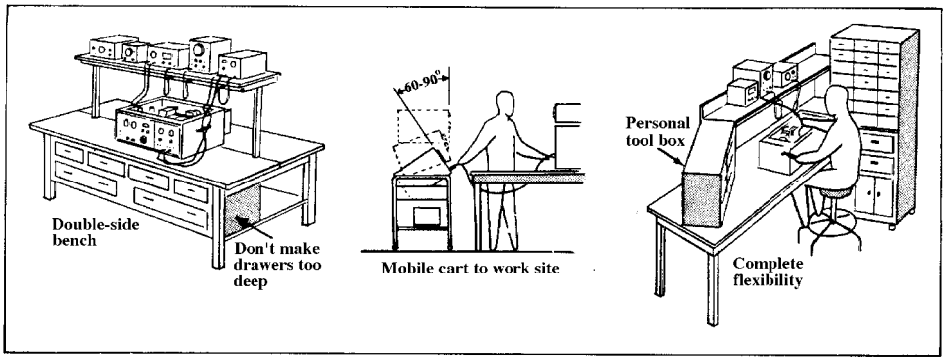

Administrative Information Only

3.3.4.4 Workbench surfaces. Different surface characteristics are required for different kinds of work. Working directly on painted metal surfaces should be avoided because the surface will scratch, chip, peel, or be left with dents. Replaceable surface materials allows greater flexibility in workbench use and table height may be varied by use of added materials.

3.3.4.4.1 Heavy duty surface. Heavy gauge steel, iron plate, or heavy wood stock may be used for this function. A sheet of wood or masonite or other similar material should be placed on these surfaces to avoid noise and mild shocks. These layers should be held in place and can be retained with screws for easy removal.

3.3.4.4.2 Light duty surface. Metal or other surface materials may be overlaid with wood or masonite. Rubber or neoprene mats can also be used.

3.3.4.4.3 Electrical work. Metal workbenches should be avoided for electrical work. A non-conductive work surface, such as a rubber mat should be used for electrical work.

3.3.4.5 Workbench aids. Workbenches should offer illumination aids; space and supports for accommodating procedures, prints, and manuals; access to power sources; vacuum and service air outlets; magnifiers as required; built-in test equipment; and overhead lift devices as needed.

3.3.4.5.1 Power outlets. Several power outlets should be provided for each workstation. To avoid obstruction, power outlets should be placed at both sides of the workbench and/or on the front face of the bench just below the work surface. Another option, especially for detailed work as in an I&C shop, is the use of small power-cord booms which carry the power cord above the work components. Retractable or coiled cords may also be used:

3.3.4.5.2 Power switches. To avoid accidental activation, power switches should be in a raised location high above the bench surface. Switch guards are also recommended.

3.3.4.5.3 Vacuum and service air outlets. Vacuum and service air outlets should be placed to the side and in higher locations. Placements on the front edge of the bench may be acceptable if protected with smooth-edge guards which also protect the worker from injury.

3.3.5 Laydown areas.

3.3.5.1 Multiple laydown areas. To minimize laydown job interference, at least two separate laydown spaces should be provided in mechanical and electrical workshops. An alternate approach is to have one much larger laydown area.

3.3.5.2 Size of laydown area. Exclusive of space for aisle ways, a minimum 12 ft by 12 ft dedicated space per laydown area is recommended.

3.3.5.3 Laydown environmental control. Adequate environmental control including heating, ventilation, and air conditioning should be provided. If the space is near doors or other openings to the outside, protective barriers should be provided.

3.3.5.4 Lighting. Adequate overhead lighting should be provided with space and power being allowed for portable lamps and stands where required. Where equipment is to be used in enclosures and is not subject to blackout or special low-level lighting requirements, illumination levels shall be as specified by Table 3.1, Specific task illumination requirements. Illumination shall be distributed to reduce glare and specular

Administrative Information Only

reflection. In situations where standards for illumination level are not available, test for visibility under these conditions should be conducted. Capability for dimming shall be provided. Adequate illumination shall be provided for maintenance tasks. General and supplementary lighting shall be used as appropriate to ensure that illumination is compatible with each task situation. Portable lights should be provided for personnel performing visual tasks in areas where fixed illumination is not provided. For display lighting, see Table 3.1, Specific task illumination requirements.

Table 3.1. Specific task illumination requirements.

Illumination levels		
	Lux* fc	
Work area or type of task	Recommended	Minimum
Assembly, general		
coarse	540 (50)	325 (30)
medium	810 (75)	540 (50)
fine	1075 (100)	810 (75)
precise	3230 (300)	2155 (200)
Bench work		
rough	540 (50)	325 (30)
medium	810 (75)	540 (50)
fine	1615 (150)	1075 (100)
extra fine	3230 (300)	2155 (200)
Business machine operation (calculator, digital, input, etc.)	1075 (100)	540 (50)
Console surface	540 (50)	325 (30)

3.3.5.5 Drains. Drains should be provided at the periphery of all laydown spaces to direct the flow of liquids away from the work area (for example, pump disassembly generally causes water spillage and solvents or port-work washdown requirements are other common sources of liquids).

3.3.5.6 Service air. Service air outlets should be available near laydown areas to avoid the need for extended air hoses across the shop.

3.3.5.7 Power outlets. Multiple power outlets near laydown work areas should be provided for power tools, lamps, and similar aids.

3.3.5.8 Pallets and laydown platforms. Except in cases of very large components, use of pallets or laydown platforms is recommended to avoid contamination with accumulated oil, small scraps, solvents, water, etc.

3.3.5.9 Platforms. Platforms should be used when workers must have access to lower portions of the worked on component as well as to the top and sides. Platforms about 457 mm (18 in) high or with adjustable heights are recommended. A platform size of 762 mm by 1219 mm (30 in by 48 in.) is recommended.

Administrative Information Only

3.3.6 Overhead lift devices. Overhead lift devices such as the bridge crane, monorail, fixed crane or davit, and fixed beam hoist points should be provided as needed. The bridge crane provides the most flexibility (See also Section 4.4, Cradles, cranes, hoists, padeyes).

3.3.6.1 Bridge crane. The bridge crane should be at least 4.57 m (15 ft.) above the floor to allow safe passage over all floor obstructions.

3.3.6.2 Monorail. The monorail should have a clearance of from 2.44 m - 3.05 m (8 - 10 ft) Floor clearance should be provided directly below and throughout the track route. To avoid interference with laydown work in progress, it should be located adjacent to, but not directly over laydown areas.

3.3.6.3 Fixed crane or davit. The fixed crane or davit should have a 1.83 m - 3.05 m (6 - 10 ft) clearance. Floor clearance should be provided directly below the total arc. Stops should be provided for safe clearance of walls and obstructions. The fixed crane or davit should be located near or over laydown areas or heavy repair workbenches and at yard entries for truck load and unload operations.

3.3.6.4 Fixed-beam hoist points. Attached at the ceiling, a 2.44 m - 3.05 m (8 - 10 ft) clearance should be allowed. Fixed-beam hoists should be located over laydown areas to aid lift and transfer of heavy components of movement aids.

3.4 Radiological Workshops

3.4.1 General principles

3.4.1.1 Need for Radiological workshops. Separate "radiological workshops" should be available in normally contaminated areas. Although expedients such as tents, glove boxes, portable walls, plastic, fabric, or wood barriers may be used, inclusion of hot work in otherwise clean shops, such as working on contaminated hardware, can contaminate clean access routes and the clean shops themselves. When work is done with contaminated materials, boundaries of contaminated "hot" areas should be clearly marked and labeled. Unless otherwise specified or contravened by the guidelines for radiological workshops, the guidelines in Section 3.3, Workshops, in this document, should also be followed.

3.4.1.2 Enclosing radiological work areas or glove boxes. Radiological work areas should be fully enclosed or glove boxes provided to avoid spreading contaminated particles that may result when contaminated components are repaired.

3.4.2 Layout and relationship to other activities

3.4.2.1 Direct openings to outside. To control contamination, direct openings to the outside from the hot workshop should be avoided. Where access is required, a foyer, corridor, or similar interim enclosure should be used. To the degree possible, access routes should be isolated from clean areas. Opening doors should not cause drafts into or out of the shop.

3.4.2.2 Items provided at entrance/exit points. Where the shop exit does not lead directly into a plant hot area, the shop exit requires protective garment removal, step-off pad, waste handling barrels (for garments), and a cart or table for health physics monitoring gear should be provided.

3.4.3 Workshop layout. Workshop layout should increase ease of flow of materials and personnel and decrease potential exposure.

Administrative Information Only

3.4.3.1 Aisle ways. Aisle ways should be straight and branch at 90˚ to provide adequate space for turning radiuses.

3.4.3.2.1. Avoid traffic through central shop area. Major aisles and entries should be placed to prevent primary traffic passage through the central shop area. Traffic flows near workbenches and machinery should be minimized.

3.4.3.3 Workstations and equipment. Workstations and equipment should be placed parallel or at 90˚ to aisle ways to retain the same advantage for access and movement.

3.4.3.4 Drains. Drains should be placed at peripheries of aisle ways and work areas to drain fluids away from these areas and to minimize long floor drain runs.

3.4.3.5 Service outlets. Service outlets for power and air should be placed to minimize the number of cords and lines that cross aisle ways and laydown areas or workstations.

3.4.3.6 Boundary lines. Boundary lines should be painted on the floor to define required clearances. Solid barriers should be used to ensure hazardous clearances and to support environmental control requirements.

3.4.3.7 Laydown areas. Laydown areas should be clear of aisles and protected from machinery and potentially hazardous work areas. There should be wide aisle access to laydown areas.

3.4.3.8 Work areas with out-of-shop interfaces. Work areas such as tool crib and office spaces that have out-of-shop interfaces should be placed to minimize traffic through the shop.

3.4.3.9 Protective clothing and wrapping. Assigned space should be adequate to allow for the use of protective clothing, use of protective wrapping.

3.4.4 Minimizing contaminants at workstations. The following steps should be taken to minimize the opportunity for accumulation of contaminants at workstations:

a. Small openings and cracks in which contaminated dust and dirt can collect should be avoided.

b. Porous surfaces should be coated with a sealer.

c. Metal workbenches should be used where feasible.

d. Replaceable surface materials including replaceable plastic wrap should be used on workbench surfaces and for other areas as applicable.

e. Aids such as lamps and special tools at the workstation should be provided to increase efficiency and minimize time needed in the hot environment.

3.4.5 Laydown surfaces. The need to protect against the spread of contamination and reduce personnel exposure requires special hot shop design and practices for laydown surfaces including those listed below.

3.4.5.1 Sealing walls and floors. Walls and floors should be sealed to avoid accumulation of a contaminating residue.

Administrative Information Only

3.4.5.2 Floor area size. hot shop laydown floor areas should be at least as large as those for comparable clean shops.

3.4.5.3 Surface preparation. Prior to work, the floor should be prepared by first spreading heavy-duty paper or plastic sheeting and taping it down at the edges. Similar surface preparation should be done for pallet laydown or with raised platforms.

3.4.5.4 Drains. To avoid accumulation of contaminated fluids, drains should be placed at the periphery of laydown surfaces. Washdowns and wipedowns should also have adequate draining.

3.4.5.5 Barrier protection. Barrier protection varying from simple distance from hot equipment to block walls and lead blankets or sheathing should be used to minimize exposure.

3.4.6 Lift and movement aids. To minimize personnel exposure, lift and movement aids should be provided. Examples of such aids are monorails, fixed-beam hoist points, hand trucks, dollies, carts, and portable lifts. Interruptions to smooth rolling should be avoided at the entrance.

3.4.7 Tool storage. Open shelves and hanging tools should be used in preference to a central enclosed storage area to minimize bulk storage and contaminated tool handling. Machinery should have associated storage and access to machine tools and parts.

3.4.8 Documentation handling. Separated and enclosed cabinets may help delay contamination of document. To move documentation such as checklist and QA signoffs to uncontaminated areas, a copy machine may be installed at the shop barrier to emit copies on the clean side. Where documentation is provided electronically such as though use of notepads, laptops, or desktop computers, the electronic documents can be transmitted to computers (or printers) in the uncontaminated area for subsequent printing.

3.4.9 Decontamination. Adjacent health physics facilities are generally adequate for personnel decontamination. Consultation with health-physics personnel is recommended to provide the most cost-effective techniques and adequate provisions of drains, basins, and similar washdown and cleaning needs. Protective wrapping is also recommended for this purpose.

3.5 Other shop and office areas

3.5.1 Toolrooms and toolroom arrangement.

3.5.1.1 Toolroom location. Unique tools and small supplies of common tools that support anticipated maintenance activities in a given area should be stored at or near the location where they will be used. Although Maintenance personnel generally prefer that the central tool storage area or bin be located in the immediate vicinity of their workshops, placement of other local tool areas throughout the plant can increase work efficiency (for example a toolroom in containment housing specialized tools used in containment during outages) .

3.5.1.2 Tool storage. Tools should be stored in an organized manner so that they can be easily identified, removed for use, and replaced.

3.5.1.2.1 Functional arrangement of tools. Tools should be arranged according to function and can be hung up on racks or walls.

Administrative Information Only

3.5.1.2.2 Use of painted outline. A painted outline may be used for each specific tool to provide a cue to its assigned place in the crib.

3.5.1.2.3 Tools requiring frequent maintenance or checks. Tools requiring frequent preventive maintenance or operational checks such as tool bits, drills, vacuum cleaners, and sanders may be placed in one section of the toolroom.

3.5.2 Rest and break provisions. Rest and break areas such as cafeterias, snack rooms and diversion and exercise areas should be provided in or near the workshop to improve job performance and efficiency.

3.5.3 Technical library. Maintenance technicians should have easy access to a well-organized and controlled technical library which includes procedures, vendors' manuals, plant schematics, etc.

3.5.4 Clerical support staff offices. A clerical staff may be needed to relieve supervisor and foreman workloads and to assist shop personnel. Suggested considerations include:

a. Direct access by supervisory and shop personnel

b. Ample storage provisions for manuals, prints, and historical files.

c. Office machines which may include typewriters, computers and related hardware such as printers, copy machines, microfiche reader and printer, and a lamination machine for protection of high use documentation.

3.5.5 Specialized support offices. Where needed, space should be assigned for support specialists such as planners, engineers, and technicians. Typical needs include computers, drafting boards, file cabinets, wall display boards, and a desk and/or table with chairs.

3.6 Storage areas (2.1.4.5)

3.6.1 Determination of storage requirements. Storage area volume, space, and location including warehouse, workshop, and various yard storage requirements, should be determined through a systematic analysis of storage needs.

3.6.1.1 Storage for seasonal items. Organized storage facilities should be available for seasonally used items such as fans and heaters.

3.6.1.2 Storage items used repeatedly. Adequate storage should be provided for materials and spares used on a recurrent basis that are not kept in a warehouse.

3.6.1.3 Materials used during overhauls and outages. Special storage should be provided for tools and special equipment used during overhauls or outages.

3.6.1.4 Contaminated equipment. Special storage should be provided for contaminated equipment that is used during outages.

3.6.2 Administrative controls for spare parts. An administrative computer based program for monitoring, maintaining, reordering, and issuing spare parts should be established. Parts received should be categorized, and personnel should be assigned responsibility for maintaining the parts inventory.

Administrative Information Only

Issuance procedures should be established so that only storekeepers, not maintainers, retrieve warehouse stores.

3.6.2.1 Shelf life. For items which have a specified "shelf life" after which their use is not recommended, a program should be developed for tracking the item in storage and for the disposing and replacing of it after the specified shelf life. The program should include reviews of environmental considerations related to the shelf life of the item.

3.6.3 Temperature and humidity control. Stored items such as adhesives, solvents, welding rods, calibration and test instruments, gaskets, and paper require control of temperature and humidity; consequently, provision should be made for space needed for air conditioners, refrigerators, and sealed containers with environmental controls.

3.6.4 Protection of stored materials. Protection of stored materials from sources of contamination should be provided. In general, it is better to isolate sources of contamination, such as machinery and work areas, from stored materials than to devise ways of protecting stored materials from contamination.

3.6.5 Hazardous materials. Separate, clearly labeled enclosures should be provided for hazardous materials. Cabinets should be painted in accordance with the plant-coding scheme with yellow or red being recommended. Items should be stored separately according to the communality of safety provisions (for example, contaminated equipment should be stored separately from flammable, volatile, caustic materials. Placards should be posted to identify the hazards and accident- reducing procedures.

3.6.6 Fragile items. Fragile items may be stored in the protective packaging in which they were shipped; consequently, storage areas should be designed with enough space to accommodate this packaging When unpacked, these items should be stored individually in bins or drawers with partitions so that one can be handled without disturbing others. In some cases, cushioned liners may be needed; however, highly porous foam should not be used with instruments having protruding parts which may catch on the foam. Sets of flat drawers are recommended for storage of different sizes and types of gaskets and can be labeled accordingly.

3.6.7 Document storage. Space should be provided for storage of documentation at workbenches and at craft paperwork areas. This document storage includes prints, technical manuals, and procedures.

3.6.7.1 Print storage. Whether stored within individual shops or in a common area, adequate storage should be provided for prints required in each workshop. Print storage and handling considerations include

a. Protected storage for minimizing wear and aging of prints

b. A convenient location

c. A scheme for indexing and accessing parts

d. Nearby print laydown surfaces for temporary use

e. Copy capability or other measures to allow shop personnel to take prints to workstations or other plant sites.

Administrative Information Only

3.6.8 Personal storage. To avoid clutter and to provide individual control over personal items such as coats, hats, and lunch pails, storage for personal items should be provided such as in the form of stacked lockers.

3.6.9 Use of modular drawer cabinets and steel shelving. Modular drawer cabinets can be placed side by side and back to back for concentrated small-part storage, and steel shelving can be stacked on top to hold larger cartons.

3.6.9.1 Drawer design. Drawers should have flexible dividers and should roll out to full view for easy retrieval of a variety of parts. The use of adjustable shelving permits easy restocking and convenient bulk storage. Drawers should be provided with a safety stop at full extension to avoid accidental withdrawal of the entire drawer. The upper part of the drawer's enclosure should be smooth to avoid catching items as the drawer is withdrawn. Runner tracks should be incorporated to avoid binding during drawer withdrawal (See also Figure 3.6.1, Drawer design features).

Figure 3.6.1. Drawer design features.

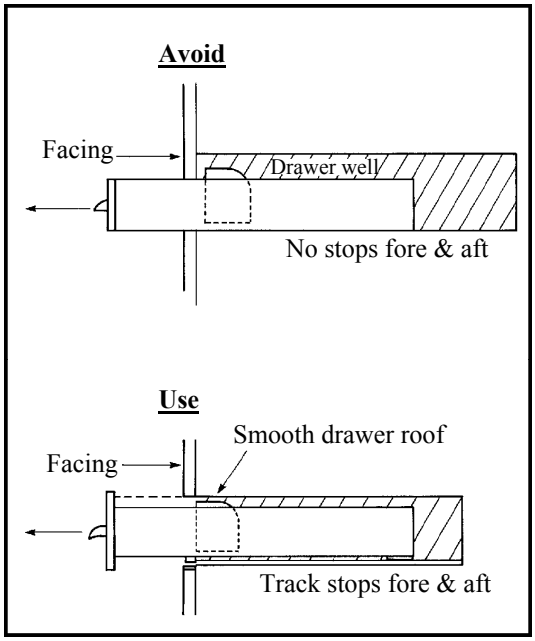

3.6.9.2 Shelf design. Where shelves are used to store items, open two-sided shelves should be avoided because items can be pushed off the opposite side. Small ridges at shelf edges should be considered to prevent roll-off of items. Downward protrusions from upper shelves should be avoided. The highest shelf should not exceed 1.78 m (70 in.) for visibility and safe access.

Administrative Information Only

Figure 3.6.2. Open shelf design feature.

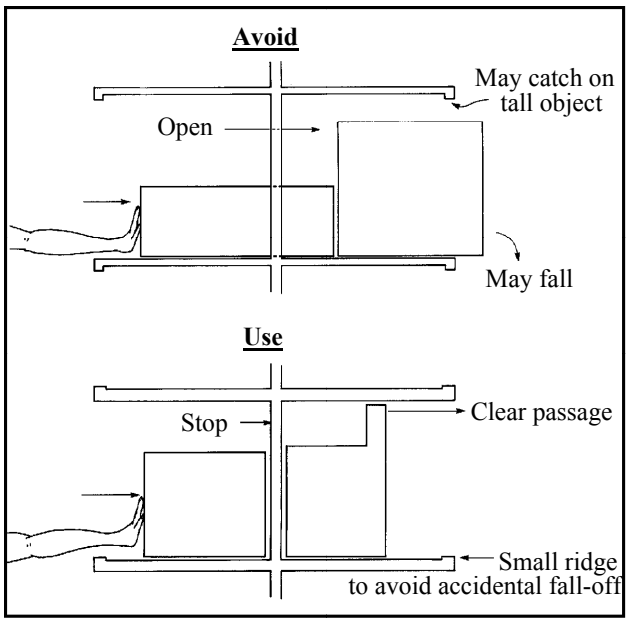

3.6.10 Storage bins. Storage bins should provide adequate visibility into the bin, the ability to withdraw any given bin, and adequate depth of the bin front. The upper edge of the bin closure should not be so high as to preclude being able to look down into the bin. Storage bins can be made by placing tote boxes on open shelves having a forward edge ridge.

3.6.11 Labeling. All storage locations throughout the shop should be labeled according to a standard scheme.

3.6.12 Control and inventory. Maintenance related items including those stored in special locations should be controlled and inventoried.

3.6.13 Storage does not interfere with traffic. Items should be stored so as not to interfere with normal entrance and exit pathways, vehicular traffic paths, and emergency escape routes.

3.6.14 Emergency storage.

3.6.14.1 Emergency equipment and supplies. Adequate and suitable space for emergency equipment and supplies should be provided so they are readily accessible and they can be kept in an immediately usable state.

3.6.14.2 Hostile Environments. Equipment such as air packs, protective clothing, and flashlights should be located so that operators and maintenance personnel do not have to traverse "hostile" environment to reach it. For instance, flashlights should be located so that in the event of station blackout, they can be reached by operators and maintenance personnel relying solely on battery pack installed lighting. In the event of contamination, air packs should be reachable without exposing operators and maintenance personnel to toxic or contaminated air.

Administrative Information Only

4.0 MAINTENANCE SUPPORT EQUIPMENT

Maintenance Support Equipment (MSE) refers to apparatus which are used for handling, lifting, positioning, towing, fueling, and lubricating tasks in the performance of maintenance. Specific apparatus included are jacks, cradles, cranes, hoists, elevators, and various remote handling equipment. Excluded from this definition are tools and test and service equipment.

4.1 General guidelines

4.1.1 Maintenance Support Equipment Design. All maintenance support equipment should be selected and designed so that it:

a. Is as simple as possible to operate, use, and maintain.

b. Is compatible with the maintainability features built into related equipment, and with the maintenance environment in which it will be used.

c. Provides maximum protection for components and working parts to minimize the need for repair.

4.2 Vehicles

4.2.1 Manual vehicles. Vehicles in the form of hand trucks and dollies should be provided for handling smaller loads.

4.2.1.1 Clearance for hand trucks. Turning clearances should accommodate at least the length of the truck plus the handler. A minimum turning clearance of 1.22 m (4 ft.) is recommended. Floor surfaces should also have no obstructions that would interfere with the use of the hand truck.

4.2.1.2 Steering control for dollies. Steering control is best with two rear wheels and two forward casters. Four casters may be used to increase maneuverability and reduce the turning radius, but the dolly will then require greater care in handling.

4.2.1.3 Handles for dollies. Handles should be provided for dollies to increase steering control. Handles should be easy to remove to achieve greater clearance for load and unload movements.

4.2.1.4 Wheel and caster locks. Wheel and caster locks should be provided to stabilize the dolly during loading and unloading.

4.2.1.5 Powered dollies. Powered dollies should be considered because their powered drive and steering capability make handling safer and more convenient.

4.2.1.6 Cradle. A cradle should be used for securing rounded or cylindrical components placed on dollies or other flat surfaces.

4.2.1.7 Carriages. Carriages, a load bearing framework on wheels, may be useful for moving heavy tool boxes and drums found in most electrical and mechanical shops.

Administrative Information Only

4.2.2 Powered vehicles.

Powered vehicles should be provided for handling large, heavy loads.

4.2.2.1 Vision. Vehicle operators should be positioned so that they can see the periphery of the vehicle and its load in relation to pathway obstructions. The operator should be able to continuously observe the load as it is raised, lowered, or otherwise moved.

4.2.2.2 Control and display position. Controls and displays required to operate the vehicle should be located so that the operator can reach or see them while visually monitoring vehicle and load clearance.

4.2.2.3 Guards and screens. Appropriate guards or screens should be provided to prevent materials or components being transported from toppling onto the operator.

4.2.2.4 Warning system. A warning system should be provided to indicate when a load is too heavy or when an load shift is approaching the imbalance point.

4.2.2.5 Fail safe features. Fail safe features should be provided to prevent drivers from leaving the vehicle unsecured on an incline or in gear.

4.2.2.6. Gasoline engines. Because of ventilation problems, power sources other than gasoline should be used where feasible. Adequate ventilation should be provided in areas where gasoline vehicles are used.

4.2.2.7 Air cushion aids. Where flat, regular floor surfaces are available, air cushion aids may be used to move heavy objects using shop service air to float the load on a film of air. These aids may be effective load-transfer vehicles because the power source is convenient, minimal force is required to move heavy objects, maintenance requirements are low, and passage clearance needs are reduced.

4.3 Design principles for jacks

4.3.1 Transportation, handling, and storage. Jacks should be designed so they can be transported, handled, and stored easily.

4.3.1.1 Small jacks. Small jacks that must be lifted and carried by one person should not exceed 18.14 kg (40 lbs).

4.3.1.2 Larger jacks. Larger jacks should be mounted on wheeled carts that have locking wheels. Repositioning and accurate centering can be accomplished using a cart with swivel wheels.

4.3.1.3 Large hydraulic jacks. Large hydraulic jacks may be designed with wheels that may be retracted or folded into the base of the cart, thus allowing the Ram base to touch the ground for added stability.

4.3.2 Jack handles. Jack handles should be removable or folding. If a jack handle is left protruding during maintenance, there is a possibility that personnel or equipment may strike against the handle, knocking the jack from under the load.

4.3.3 Label contents. Jacks should be labeled to show direction of crank rotation for raising or lowering as well as maximizing the load they are designed to handle.

Administrative Information Only

4.3.4 Access plates for hydraulic jacks. On hydraulic jacks, one or more access plates, at least 152 mm (6 in.) in diameter, should be permitted to allow inspection and cleaning of the hydraulic fluid reservoir.

4.3.5 Safety-locking devices. Mechanical safety-locking devices should be provided to prevent accidental lowering of the load in the event of hydraulic system failure.

4.4 Cradles, cranes, hoists, padeyes

4.4.1 General principles

4.4.1.1 Control labels. All controls used with lifting equipment should be labeled as to function and direction of movement. Controls should conform to normal movement relationships, e.g. moving the steering wheel clockwise will move the vehicle to the right.

4.4.1.2 Control placement. The placement of controls should be within convenient reach of the seated operator; the placement should afford optimum visibility at all times.

4.4.1.3 Load capacity. The load capacity should be indicated on the equipment using a substantial and durable rating chart with clearly legible letters and figures. The rating chart should be securely fixed and be easily visible to the operator while seated at his control station.

4.4.1.4 Load-indicating devices. Load-indicating devices should be used for loads of uncertain weight which could be 90-100% of the manufacturer's rated capacity for the equipment or within the maximum working load of any part of the tackle. Load-indicating devices should also be used where the equipment tackle configuration could result in a greater stress of the hoist or tackle than would result from apparent hook load. Audible warning devices should be provided when necessary to indicate that the allowable load is being exceeded.

4.4.1.5 Access. Where not otherwise specified in this document, access dimensions for construction machinery should conform to SAEJ925 (Society of Automotive Engineers), as applicable.

4.4.1.6 Handholds and footholds. Suitable handholds and footholds should be provided to facilitate personnel access and movement.

4.4.2 Design principles for cradles

4.4.2.1 Load positioning. Cradles should be designed so that a load can be quickly, effectively, and safely positioned on them.

4.4.2.1.1 Facilitating positioning of equipment and loads. Positioning of equipment and loads should be facilitated by using center-of-gravity identification, matching guidelines, identification of attaching points, detachable probes, etc. Latches on control levers should not cause delay in operation

4.4.2.2 Cradle shape and use of adapters. Cradles should be shaped to fit the equipment to be carried. Cradles may be adjustable or fitted with adapters to handle various sizes of equipment.

4.4.2.3 Load bearing area. The cradle should have sufficient load-bearing area to support the load when the equipment must remain on the cradle without support bands or hoists.

Administrative Information Only

4.4.2.4 Metal straps. Metal straps should be provided for attaching equipment to the cradle during positioning procedures.

4.4.2.5 Controls for positioning when cradles part of other equipment. If cradles are designed as integral parts of other equipment, basic equipment with controls for positioning the cradle should be provided.

4.4.2.6 Platform. When practical, a platform should be attached to the lift cradle to allow a technician standing on the platform to directly observe positioning of the component.

4.4.2.7 Safety devices to prevent load dropping. Mechanical safety devices should be provided to prevent inadvertent dropping of the load because of hydraulic failure. Check valves or ratchet devices are acceptable safety provisions.

4.4.3 Design principles for cranes

4.4.3.1 Through type bolts. "Through" type bolts with conventional nuts and lock washers or lock nuts should be used for assembling structured members.

4.4.3.2 Hook eyes for easy assembly. Hook eyes should be provided on boom sections at the centers of gravity for easy boom assembly and disassembly.

4.4.3.3 Adjustable boom length. Provisions for adjusting the boom length to accommodate operational requirements and to make the equipment more versatile should be provided when possible.

4.4.3.4 Winch assemblies. Two identical and interchangeable winch assemblies should be provided to operate the cables of the crane, one for hoisting the load and the other for controlling the boom height.

4.4.3.5 Bridge cranes. The bridge crane should be used as the primary crane because it provides the capacity and flexibility to meet lift and movement requirements.

4.4.3.6 Supplementing Bridge Cranes. To avoid delays during peak work periods, fixed davits and cranes as well as portable cranes should be used to supplement bridge cranes.

4.4.3.7 Cranes mounted. Heavy maintenance support equipment such as portable electric winches and cranes should be mounted for ease of movement; however, wide clearance should be allowed to accommodate the broad base needed for the stability of the crane

4.4.3.8 View of work. Maximum, unobstructed view of the work, including the point sheaves of the basic boom of a revolving crane at a 3-m (10 ft) radius, should be available to suitably clothed and equipped users with relevant body dimensions varying between 5th and 95th percentiles.

4.4.3.8.1 Operator cab rotation. The operator's cab should rotate with the crane to allow continuous surveillance of the work operation.

4.4.3.8.2 Crane operator’s seat location. The crane operator's seat should be located to allow optimum view of the load, ground, and equipment in the vicinity, and at the same time permit easy operation of the crane's controls.

Administrative Information Only

4.4.3.9 Communication from bridge crane cab. The operator should be provided with a means of communication such as a signal person, telephone, or two-way radio, particularly when the load block is positioned so that the operator cannot have a full view of the load block and its surroundings.

4.4.3.10 Egress. For cab operated cranes there should be at least two means of egress from the crane, remote from each other, to permit departure under emergency conditions.

4.4.3.11 Escape and descent if bridge crane becomes disabled in mid-traverse. A collapsible ladder or escape harness and evacuation reel should be provided for the bridge crane operator in case the crane becomes disabled in mid-traverse.

4.4.3.12 Crane lights. Lights should be mounted on cranes used outdoors so that movement of the load carried by the crane can be followed during night operation.

4.4.4 Design principles for hoists

4.4.4.1 Monorails. Monorails should be considered for areas where overhead clearance is less than required for a bride crane.

4.4.4.1.1 Maximum load capacity. Maximum load capacity should be plainly posted at several points.

4.4.4.2 Fixed-beam hoisting. Fixed beams should be provided for hoists to transfer loads on and off small scale vehicles, down staircases, and in areas where obstructions are in the way of a straight upward lift and where hoist-and-trolley operations are needed.

4.4.4.2.1 Safety load limits. Safety load limits should be plainly posted on the fixed beams used for hoisting.

4.4.4.3 Hand held control box. Hoist controls should be incorporated into a portable, lightweight, hand-held control box. The box should have the following design features (see also Figure 4.4.1, Hand-held hoist control box.)

Administrative Information Only

Figure 4.4.1. Hand-held hoist control box.

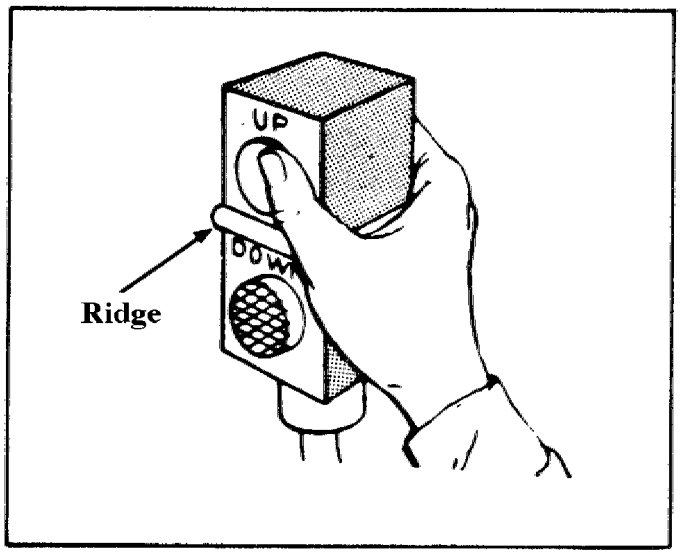

a. Two spring-load, recessed pushbuttons, one above the other should be used as controls. The top button should be "green" and labeled "Up," the bottom button should be "red" and labeled "Down." Where possible, color code functions: up should be green, and down should be red.

b. Each pushbutton should have a flat (or slightly concave) surface, large enough to be pushed, repeatedly, without discomfort. Pressure to activate either button should be 2.8-11.2 N (10-40 oz).

c. A 50.8 mm (2 in.) clearance should be provided between each pushbutton to further prevent accidental activation of the wrong button. Ridging between the buttons should be provided.

d. The control box should be manageable enough so the technician can reach both control buttons while holding the box securely and comfortably in one hand.

4.4.4.4 Location of moving parts. Moving parts such as belts, chains, gears, and linkages should be placed where operations and maintenance personnel are least likely to come into contact with them. Guards should be provided if danger from contact exists.

4.4.4.5 Lug clearance. Sufficient clearance for lugs used for attaching hoist beams to equipment structures should be provided so the attachment can be made easily and quickly.

4.4.4.6 Pins and matching lugs. Pins should have automatic locking features and do not require the insertion of cotter pins for locking. The pins should be attached to the hoist by a wire or chain. Matching lugs should be provided on the component or cradle so that the hoist beam lugs can be set into the matching lugs to facilitate insertion. (See also Figure, 4.4.2, Example of hoist lug and lock pin.)

Administrative Information Only

Figure 4.4.2. Example of hoist lug and lock pin.

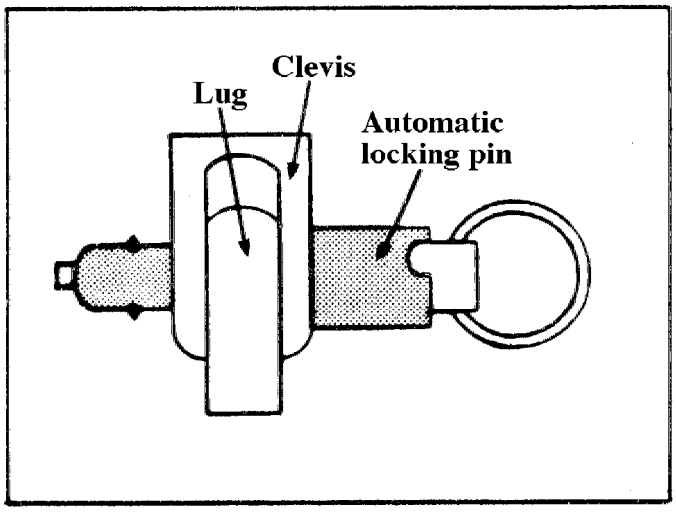

4.4.4.7 Brakes. Each independent hoisting unit should be equipped with:

a. At least one holding brake applied directly to the motor shaft or to some part of the gear train.

b. Controlled-braking e.g., a means to control lowering speed (this does not apply to worm-geared hoists with a worm angle that prevents the load from accelerating in the direction) of lowering.

4.4.4.7.1 Automatic braking. Holding brakes on hoists should be applied automatically when the power is removed. When power- operated brakes with no continuous mechanical linkage between actuating and braking means are used, an automatic mechanism to set the brake when power is removed should be provided.

4.4.5 Padeyes. Where essentially vertical lifts may be needed, padeyes should be placed above equipment weighing in excess of 22.68 kg (50 lb) to support anticipated maintenance activities.

4.5 Elevators

4.5.1 Passenger and freight elevators. Both passenger and freight elevators should be provided to satisfy the differing requirements for moving people and equipment. In general, passenger elevators should not be used to carry equipment and freight elevators should not by used to move people.

4.5.2 Determine use. Features such as door width and carrying capacity should only be specified after the planned use of the elevator has been determined.

4.5.3 Carrying capacity of freight elevators. Carrying capacities of freight elevators should be at least 907.20 kg (2000 lb).

4.5.4 Passenger elevator capacity. Passenger elevators should be able to accommodate an injured person on a stretcher.

4.5.5 Elevator coverage. Elevator coverage should extend to each location and level of the facility that maintenance personnel must reach to service heavy equipment.

Administrative Information Only

4.5.5.1 Straight-line coverage. Elevators should provide straight-line coverage from the lowest to the highest elevations in the facility, avoiding the need to transfer personnel and materials from one elevator to another at some mid-point elevation.

4.5.6 Reliability. Elevators should be designed for reliable service in their intended environments, e.g., high temperature, humidity, radiation.

4.5.6.1 Ruggedness. Elevator controls and other features should be sturdy enough to preclude damage when equipment is being moved.

4.5.7 Unobstructed access. Elevators should be located so that normal points of ingress and egress will not be obstructed by structural features such as pillars. Freight elevators should have unobstructed equipment access.

4.5.8 Access not through high radiation levels. Access to any given elevator should not be precluded by high radiation levels or contamination that develops subsequent to initial operation. Consideration should be given to radiation and contamination levels that may build up over plant life.

4.5.9 Drive machinery in non-contaminated areas. Where possible, elevator drive machinery which requires access for preventive and corrective maintenance should be located in non-contaminated areas although the elevator may provide service within contaminated areas of the facility. In cases where such placement is unavoidable, the drive machinery should be adequately shielded to allow its maintenance. (

4.5.10 Padding. Elevators that are used to transport hardware should be padded or otherwise protected to withstand potential damage.

4.5.11 Emergency escape and communication devices. Elevators that are located in potentially hazardous areas should have emergency escape and/or communication devices.

4.5.12 Labeling. Controls and floor destinations should be clearly labeled and should conform to signal/labeling requirements. Where applicable, the top button should be green and labeled up; the bottom button should be red and labeled down.

4.5.13 Directional cues. When possible, provide directional cues (such as pointing arrowheads) for up and down.

4.5.14 Floor indication displays. Floor indication displays should be placed above the doorway inside the elevator as well as above every floor's elevator ingress/egress point.

4.5.15 Illuminated control buttons and floor indicators. Elevator call push buttons and floor indicators on control panels should illuminate when a control button is activated and when a particular floor is reached.

4.5.16 Maximum load signs. Maximum load signs, located where they can be easily seen and where they conform to sign/labeling requirements should be provided. Additional cautions signs should be posted where workers might be tempted to carry heavy equipment and overload it. (Sect. 7.9, Elevators, inclinators, and hydraulic-operated work platforms.)

4.5.17 Freight elevator sign. A sign barring passengers other than the operator and freight handlers should be placed inside elevators designated for freight only.

Administrative Information Only

4.5.18 Illumination. Interiors of elevators should be well illuminated under normal conditions, and light colors should be used for the elevator's walls, ceiling, and floor to help distribute interior illumination. An emergency light source independent of main power supply should be provided in the elevator.

4.5.19 Automatic braking. An automatic fail-safe brake, or other self-locking device should be provided in case the lift mechanism fails.

4.5.20 Limit stops. Limit stops to prevent injury to personnel and damage to equipment should be provided

4.5.21 Guards. Guards should be provided to prevent the accidental operation of the lift. (For example, consider guarding the "Emergency Stop" switch.)

4.6 Remote handling equipment

4.6.1 Characteristics of equipment to be handled remotely

4.6.1.1 Component compatibility. Components to be handled remotely should be tested for compatibility with the remote handling system before being included in system design and consecutive tasks and subtasks should be organized to maximize operator performance.

4.6.1.2 Design for disassembly. Equipment which must be remotely handled should be designed so that it can be broken down completely by the remote manipulator.

4.6.1.3 Quick-disconnect. Quick-disconnect devices should be provided to reduce remote handling difficulties

4.6.1.4 Alignment. Self-alignment devices (for example, grooved components that must be aligned properly to fit together) should be provided for components which must be joined remotely.

4.6.1.5 Fasteners. All fasteners should be designed so that they are not easily dislodged by accidental jostling and are readily replaceable by remote-handling techniques.

4.6.1.6 Lock and latching mechanisms. Each lock or latching mechanism should be operable from a single point, have a positive catch, and provide a clear visual indication of latch position.

4.6.2 Manipulator Design

4.6.2.1 General purpose manipulators. General purpose manipulators (including master-slave and rectilinear arm manipulators) should be provided with the following capabilities

a. A minimum of seven degrees of freedom of movement as illustrated in Figure 4.6.1, Degrees of freedom of movement for manipulator arm and wrist assembly.

Administrative Information Only

Figure 4.6.1. Degrees of freedom of movement for manipulator arm and wrist assembly.

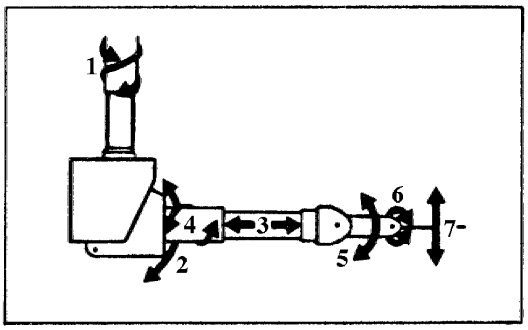

b. Ability to grasp and manipulate tools. The slave hands provided must be designed to produce the appropriate movement, grip, thrust, and torque required by the task.

c. A bilateral drive system to reflect force to the technician's arm in a natural and meaningful way. The system must be completely reversible so that a force or movement of the output will give a corresponding force or movement of the input member (knob or handle).

d. Optimal shape of the manipulator arm. The wrist joint and lower portion of the arm should be as small as possible to permit unobstructed vision by the technician as well as to permit remote manipulation of equipment in close quarters.

4.6.2.2 Rectilinear arm manipulators. Rectilinear arm manipulators should have the following capabilities:

a. Grip force indication, visual and/or auditory.

b. Horizontal movement to permit handling at any location in the "hot" area.

c. Portable control console to "follow" the arm to various locations in the "hot" area.

d. Provide positive stops to preclude danger to the objects being handled and/or "hot" area if one of the servo-loops should fail.

4.6.2.3 Power assist. For tasks involving gross positioning of loads heavier than 10 kg (22 lb), electrically or hydraulically powered manipulators with rate control should be provided (i.e., the operator's control output directly determines the rate of change of the machine output).

4.6.2.4 Master-slave manipulators. Master-slave manipulators should have the following functions and capabilities.

a. To follow the operator's natural control and effector actions by maintaining the equivalent spatial orientation and position. Errors greater than 20˚ in the synchronous arrangement of slave jaws and master control handle are detrimental to operator performance.

b. High mechanical efficiency, low inertia, and low friction.

Administrative Information Only

4.6.2.5 Electronic master-salve manipulators. Electronic master-slave manipulators should have the following functions and capabilities:

a. Variable ratios of control-effector movement.

b Variable ratios of force reflection (kinesthetic feedback).

c. Positive stops to preclude danger to the objects being handled and/or "hot" area if one of the servo-loops should fail.

4.6.2.6 Manipulator hands. Manipulator hands should permit a wide range of lifting, holding, and clamping capacities. Several illustrations of useful hand configurations for maintenance tasks are shown (See also Figure 4.6.2, Examples of manipulator hand configuration).

4.6.3 Feedback and Viewing Equipment

4.6.3.1 Kinesthetic and tactile feedback. Handling controls should be designed to provide kinesthetic and tactile feedback to the maintenance technician so that a sense of "feel" is provided as to the amount of torque or force being applied or the direction of movement being taken.

4.6.3.1.1 Shape of arm. Where possible, the arm on which the control handle is attached should have a shape similar to the manipulator arm to maximize the similarity of motions.

4.6.3.1.2 Measurement/feedback of torque and grip or thrust force. For precise measurement and feedback of torque, grip force, or thrust force, calibrated instruments on the control console should be provided. For example, a hand grip force display should be provided which indicates a force reflection over a range from a few ounces to several hundred pounds

Administrative Information Only

Figure 4.6.2. Examples of manipulator hand configurations.

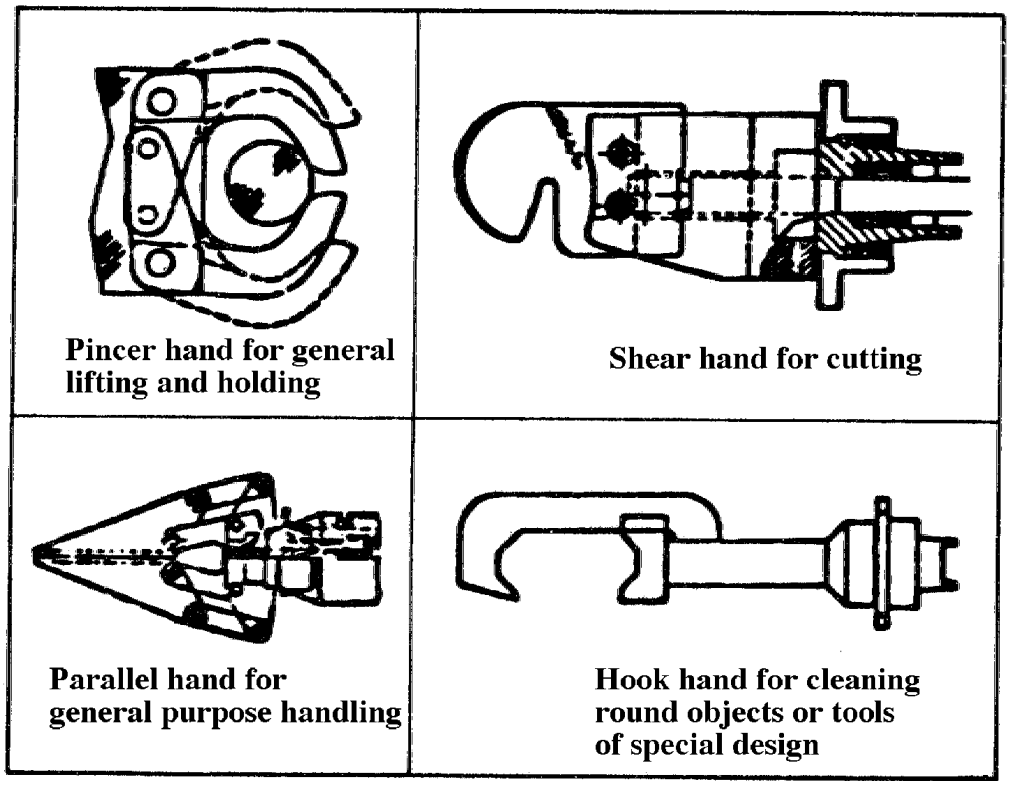

4.6.3.2 Information concerning spatial coordinates of workspace. A viewing system should be provided which gives the operator of a remote manipulator adequate information with respect to the three spatial coordinates of the workspace (i.e., X, Y, and Z).

4.6.3.3 Direct vision. A means of direct vision should be provided through shielding windows where possible. A means of achieving this is by using turntables designed to rotate the equipment so that any side can be shown to the maintenance technician. Direct vision is preferred because it provides little or no distortion of dimensions, clarity, and color discrimination.

4.6.3.4 Viewing angle. In order to avoid distortion, direct viewing of objects either near the viewing window or at line-of-sight angles greater than 60 degrees should be avoided.

4.6.3.5 Use of optical systems. Where direct vision is not possible or an adjunct to it is needed, an optical system should be provided such as binocular, or stereoscopic periscopes or microscopes where three-dimensional viewing is essential.

4.6.3.6 Use of closed circuit television. Where direct vision and optical systems are not possible, closed circuit television systems should be provided for visibility.

4.6.3.6.1 Camera placement. When closed circuit television is used to provide visual feedback for a remotely performed task, the camera should be placed so that the visual field is viewed from the normal line of sight.

Administrative Information Only

4.6.3.6.2 Use of two cameras for stereo vision. Two cameras oriented at right angles to one another with a separate monitoring screen for each may be substituted for stereo television; however, visibility is more dependent upon strong contrasts and shades than on stereoscopic effect.

4.6.3.6.3 Views from different angles and magnifications. Users should have the capability to manage TV camera angles and to zoom in where greater detail is required. Where applicable more than one camera and associated monitor may be used to provide different views of the worksite from different angles and different levels of magnification.

4.6.3.6.4 Use of color. Depending on the equipment and it's setting, color enhances the sensation of depth and may convey important information to the user but, because of its greater resolution, black and white TV should be considered, particularly when resolution provided by the color TV system is insufficient.

4.6.3.7 Use of special windows. Special windows should be provided to shield maintenance technicians from radiation while providing maximum visibility. Liquid-filled windows must provide the following:

a. Shielding effectiveness e.g. the same amount of shielding per unit surface area as afforded by the remainder of the biological shield.

b. Nontoxicity of window materials in case of breakage.

c. Stability of color and clarity (against both time and radiation).

d. Optical efficiency e.g., height transmission of a large portion of the visible spectrum, minimum haze high refraction index, large angle of view through small window aperture.

4.6.3.7.1 Preserving contrast effect. In order to preserve the contrast effect which is important in discriminating detail, care should be taken to control factors such as haze in liquid windows, cleanliness of glass surfaces, and multiple surface reflections

4.6.3.7.2 Minimizing distortion. To minimize distortion, objects should not be viewed near the window or with an angle of incidence for the line of sight which is greater than 60˚.

4.6.3.8 Lighting. Sufficient light should be provided for remote handling operations.

4.6.3.8.1 Auxiliary lighting. Auxiliary lighting should be provided for visually inaccessible locations in the equipment being handled. For example, lights should be provided on tools, test probes, and servicing adapters that are inserted into dark recesses of equipment

4.6.3.8.2 Achromatic lighting. To increase visibility, higher intensities of achromatic lighting is just as efficient as monochromatic lighting

4.6.3.8.3 Use of monochromatic lighting. Monochromatic light should be used where white light would actually interfere with observation, such as with very small components in which the parts would not be distinguishable under white light when viewing conditions are near threshold, when high magnification powers are required, or when the operator is required to view the work at high angles of incidence through refractive materials.

4.6.3.9 Use of symbol coding. If possible, symbol coding rather than color codes should be used when codes must be recognized by the maintenance technician both under conditions of direct viewing and

Administrative Information Only

color television use. Symbol coding may not be applicable for very complex equipment. However, any adaptation of color codes to correct for distortion by color television will confuse the technician who is viewing the code directly. Therefore, another method of coding other than color should be used when both direct and television viewing are required.

4.6.3.10 Lettering. Letters, numbers, and important details which must be viewed by means of television should be light against a dark background. Glazed or reflecting surfaces should be avoided.

4.6.3.11 Stereo viewing. The two images produced by a stereoscopic periscope should not differ more than 2% in magnification or 0.50 prism diopter in vertical imbalance. Horizontal imbalance will not be greater than 0.50 prism diopter so as not to be fatiguing. Light transmittance of the two optical paths should be within 10% of each other.

4.6.4 Tools and support equipment. Tools and support equipment that are used in conjunction with remote handling equipment should be designed so that they are easily accessible to the manipulator hand and easily decontaminated.

4.7 Hand tools

Hand tools include only those which are commonly used in maintenance work for inspecting, adjusting, servicing, removing, or replacing components.

4.7.1 General Principles

4.7.1.1 General tool design. Tools should be designed for maximum simplicity, practicality, and universality.

4.7.1.2 Equipment design for minimal tool use. It is important to ensure that equipment is designed to be maintained (in order of priority)

a. Without tools, where possible.

b. With the minimum number of tools for the system.

c. With the minimum number of tools for the maintenance task.

d. With common hand tools, where possible.

e. With specialized tools only when absolutely required.

4.7.1.3 Determining tools requirements. Using techniques such as task analysis, requirements for tools should be derived directly from the maintenance tasks to be performed and the design characteristics of the equipment involved. Tools requirements should be determined and validated early in system development by using them during developmental testing of the system/equipment to find duplications and omissions, and to determine if the equipment requires additional tools.

4.7.1.4 List of tools for maintenance task. Each equipment system should be accompanied by a comprehensive list of tools required for all maintenance tasks.

Administrative Information Only

4.7.1.5 Work packages containing necessary tools. A system should be established for preparing a work package containing all the tools necessary to do a job prior to its execution. For example, a list of necessary tools in the procedures to be used could be copied onto a form, reviewed by appropriate maintenance personnel, and then given to supply personnel who would take the forms and prepare work packages in time for maintainers to request these packages when the work begins.

4.7.1.6 Use commonly available tools. Where feasible, only those tools usually found in the maintenance technician's tool kit should be required for maintenance operations. Specialized uncommon tools should only be specified when they offer a significant advantage over the more commonly available tools.

4.7.1.7 Speed or power tools. Speed or power tools such as ratchets, speed screwdrivers, or power wrenches should be provided the technician when they are required because of torque demands or space limitations.

4.7.1.8 Skid-proof pliers and clamps. Holding tools such as pliers or clamps should be designed so that they are skid-proof and do not mar or scratch holding surfaces.

4.7.1.9 Adequate gripping surfaces. Adequate gripping surfaces should be provided on the handles of tools. Knurling, grooving, or shaping the handle to fit the hand are desirable.

4.7.1.10 Tool finish. In evaluating the finish to be applied to tools, consider that tools having a dull finish prevent reflected glare in areas of high illumination. However, dull-finished tools are often overlooked when closing assemblies, etc., causing loss of tools and possible damage to the equipment. The designer should therefore carefully consider the advantages and disadvantages of this type of finish in relation to the potential application of the tool.

4.7.1.11 Insulated handles. Plastic, heat- or cold-resistant handles should be specified for tools used in extremely hot or cold climates. Use of metal handles is undesirable, particularly for cold climates and for electricians' tools.

4.7.2 Screwdrivers

4.7.2.1 Screwdriver guides. Screwdrivers for small-size adjustment screws should be provided with a funnel-like guide that will aid placement of the screwdriver on the adjustment point. (See also Figure 4.7.1, Screwdriver for small sized adjustments.)

Administrative Information Only

Figure 4.7.1. Screwdriver for small-sized adjustments.

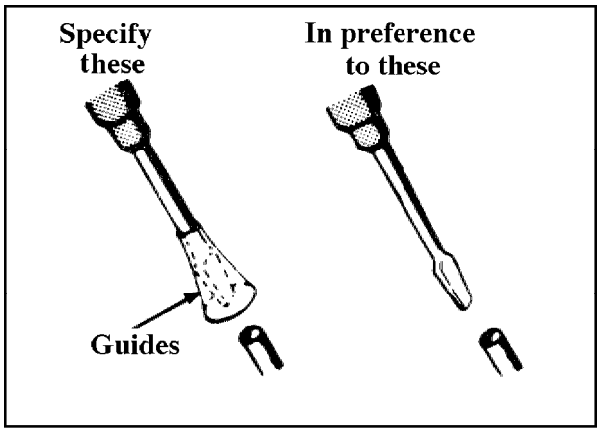

4.7.2.2 Magnetized screwdrivers and screwdriver clips. Magnetized screwdrivers, if they will not adversely affect electronic circuits, should be provided to hold free screws that cannot be held easily with the fingers. If magnetized screwdrivers are not desirable, screwdrivers should have clips. Design the clip so that it can be slid up the screwdriver shaft when not in use. (See also Figure 4.7.2, Example of clip screwdriver)

Figure 4.7.2. Example of clip screwdriver.

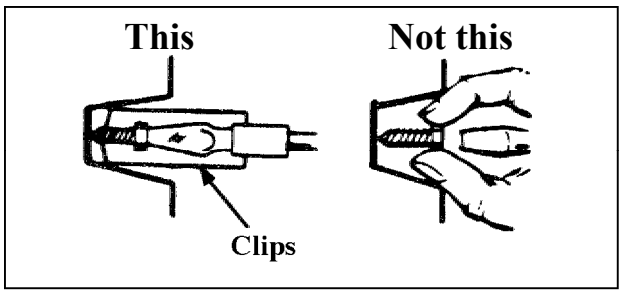

4.7.2.3 Push type screwdrivers. Push-type screwdrivers should be provided wherever screws must be rotated through many revolutions, provided the attendant resultant force on the equipment will not be harmful (See also Figure 4.7.3, Example of push type tool).

Administrative Information Only

Figure 4.7.3. Example of push-type tool.

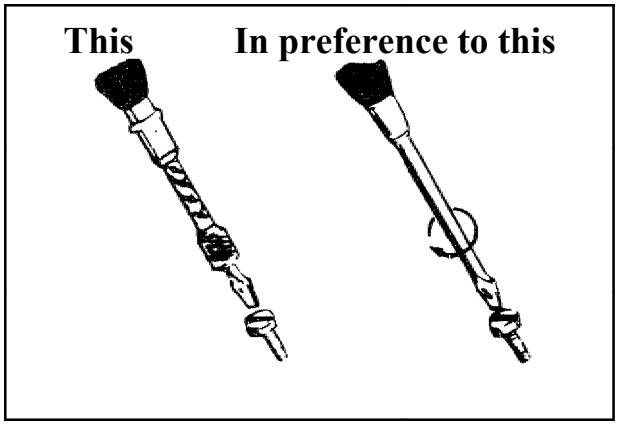

4.7.2.4 Tool compatibility. Tools should be specified which are compatible with the design of the equipment on which they will be used as well as with the job to be performed. For example, a tool size should be specified which is consistent with the size of the prime equipment. Lever handles should be specified rather than screwdriver handles when high torque is to be applied, and tools should be provided which are consistent with working space available on the prime equipment.

4.7.2.5 Positive snap-locking action for connecting sockets. Positive snap-locking action should be used for connecting sockets to the various components of a socket set. Design them so they can be easily connected and disconnected.

4.7.2.6 Ratchet screwdrivers. Ratchet screwdrivers should be provided where torque requirements are low and space is limited. They require only one-handed operation and usually require less clearance.

4.7.2.7 Offset screwdrivers. Equipment should be designed so that only straight type screwdrivers can be used. Offset screwdrivers are not satisfactory because there is a lack of normal force on the screw head slots and the slots become damaged easily. However, the use of offset screwdrivers reduces the amount of space required to turn a screw and because of space limitations may be the only solution. The overhead space requirement for offset tools and two special type offset tools for removing fasteners are illustrated below in Figure 4.7.4, Uses of straight and offset screwdrivers.

Offset screwdrivers should have the following dimensions:

a. Shaft thickness: 6 mm (0.25 in.)

b. Blade height: 19 mm (0.75 in.)

c. Shaft length: 305 mm (12 in.)

d. Pivot arm: 25 mm (1 in.)

Administrative Information Only

Figure 4.7.4. Uses of straight and off-set screwdrivers.

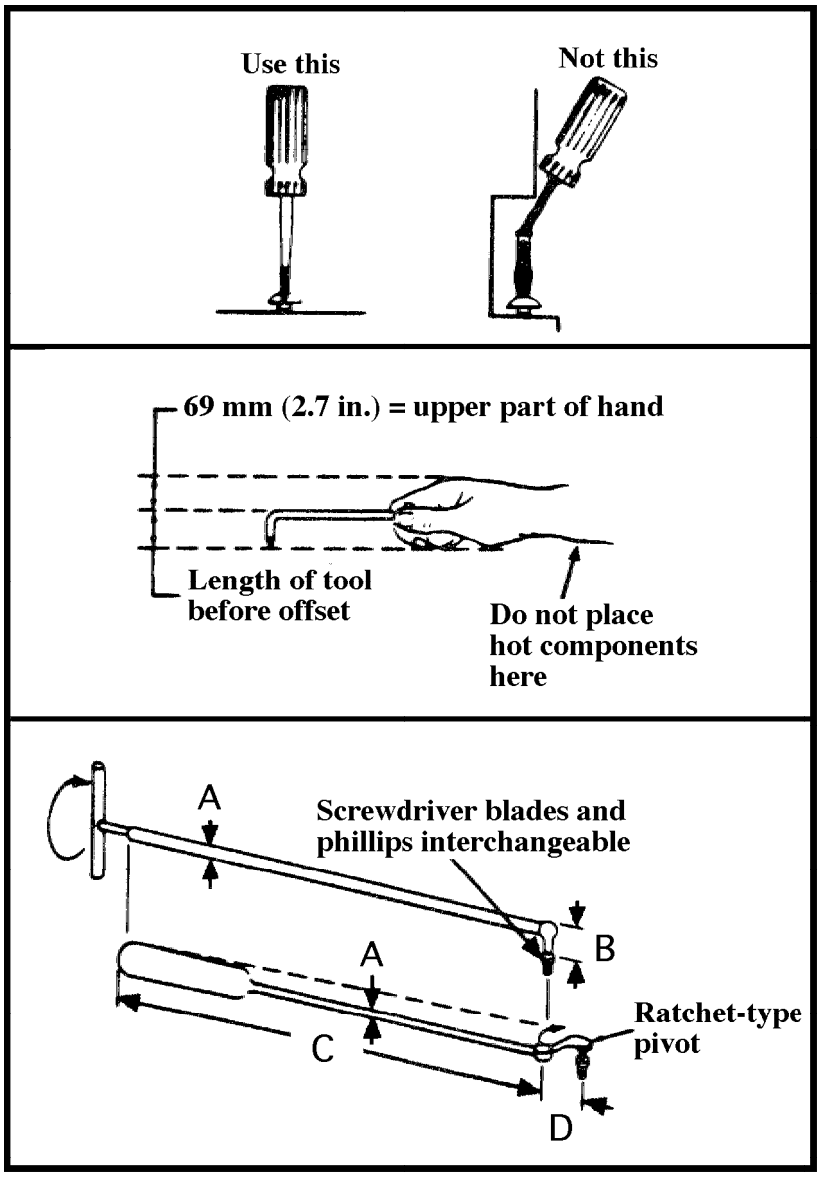

4.7.3 Other hand tools

4.7.3.1 Drills with floating chucks. Drills with floating chucks for drilling fastener holes for rivets should be used. These will insure that the hole is drilled at the proper right angle so that maximum fit tolerances are reached.

4.7.3.2 Spanner wrenches. Spanner wrenches should be designed to be operable from various angles to avoid obstructions in operations.

4.7.3.3 Templates for rigging, mounting links, arms, and rods. The technician should be provided with templates for making surface control adjustments (rigging) or for mounting links, arms, rods, or other

Administrative Information Only

such parts on a flat surface. Markings should be provided on the templates to show the desired setting or placement of the control or part.

4.7.3.4 High-speed soldering devices. High-speed soldering devices should be provided to melt connections being serviced without damaging adjacent elements.

4.7.3.5 Clamping devices. Clamping devices should be provided to remove small, closely packed plug-in devices (See also Figure 4.7.5, Example of clamping device).

Figure 4.7.5. Example of clamping device.

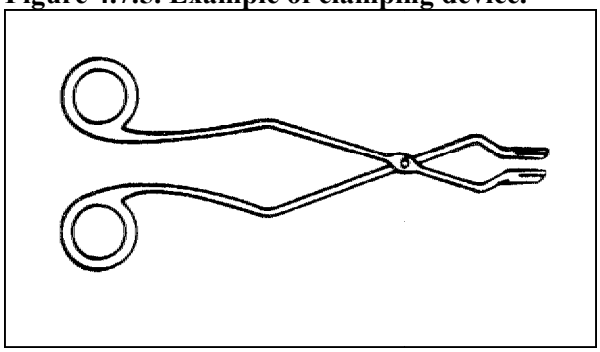

4.7.3.6 Long-nosed hemostat-type pliers. Long-nosed hemostat-type pliers should be provided which can lock, hold their grip, and be used as heat sinks.

4.7.3.7 Printed circuit card extenders and card extractors. Printed circuit card extenders and card extractors should be available to the technician for use with computerized units.

4.7.4 Safety recommendations

4.7.4.1 Tool insulation. Adequate insulation should be provided on handles or other parts of tools which the technician is likely to touch while doing maintenance work near voltages in excess of 50 volts.

4.7.4.2 Spark resistant tools. Spark-resistant tools should be provided if they are to be used in areas where fire or explosion hazards are present.

4.7.4.3 Adequate storage. Adequate storage for tools should be provided so they cannot fall and cause personal injury or be easily misplaced or lost.

4.7.4.4 Sharp corners and edges. Sharp corners and edges on tool chests should be eliminated.

4.7.4.5 Tool chests easily moved. Tool chests which are too large to be easily handled by one person should have casters or a sufficient number of handles to facilitate moving. Handles should be located so the chest will be balanced when it is being moved.

4.8 Hand tool use in hot environments

4.8.1 Separate storage for hot tools. Storage areas should be provided for maintaining two separate sets of work tools to effectively cope with the special demands of hot and clean maintenance activities.

Administrative Information Only

4.8.2 Design of tools for contaminated areas.

4.8.2.1 Smooth surfaces. Tools that are to be used in contaminated areas should be designed with grasp surfaces that are smooth. Knurled knobs and porous boots which would be more prone to collect contaminated particles should be avoided.

4.8.2.1.1 Taping tool handles. Smooth surfaces should be taped to replace the grip facility provided by knurling. In addition when the job is completed, the tape can be removed along with any contamination.

4.8.2.2 Long handled tools. Where they do not hinder necessary manipulation, long- handled tools may by used to separate maintainers from high radiation equipment.

4.8.3 Decontamination station. A tool decontamination station should be established for the maintainer's use. It should be equipped with solvents, bags, and other aids to facilitate decontamination.

4.9 Stairs, ladders, and ramps.

Stairs, ladders, and ramps refers to structures which allow personnel to abruptly change elevations by more than 305 mm (12 in.) Stairs (stiles) and ramps may be used to allow for safe and easy passage over low objects (e.g., pipes, lines) in corridors and passageways.

4.9.1 General principles

4.9.1.1 Use of stairs, ladders, stair ladders, and ramps. Types of structures that allow personnel to change elevation and characteristics that should be considered in selecting them for use are:

a. Stairs allow the fastest, safest, and easiest passage of personnel, especially when they are carrying loads.

b. Stair ladders are preferred to ladders because they provide better footing and faster, safer passage. However, sure balance and fast movement require the use of both hands on the handrails. Carrying loads up stair ladders is also hazardous.

c. Ladders are not desirable for frequent passage. They are comparatively unsafe, difficult to climb, and difficult to work from. Only loads which are strapped to personnel can be carried up ladders. Fixed ladders are preferable to semi-permanent or movable ladders; the former are more stable, less subject to clearance problems, and can be affixed with guardrails and other safety features. Portable ladders should be required and provided only for emergency functions or for use during infrequent maintenance tasks. Permanent ladders or maintenance stands are preferable.

d. In general, ramps are of value only when rolling stock must be moved between different levels and this same space can be used for pedestrian traffic. Long ramps are undesirable except for self-propelled vehicles. Requirements for personnel to push or pull rolling stock up ramps should be carefully evaluated in terms of safety and human strength.

4.9.1.2 Stair, ladder and ramp layout. Layout and design of stairs, ladders., and ramps should consider:

a. Limitations in the amount of space and clearance available.

Administrative Information Only

b. Predictable environmental conditions that will affect the structure (particularly if it will become wet or covered with ice, snow, or mud).
c. Type, direction, and frequency of traffic over the structure.

d. Relative efficiency of alternate traffic patterns.

e. Loads or other encumbrances to be carried by personnel over the structures.

f. Size and weight of other equipment that may have to be moved over the route.

g. Need for decontamination and clean up.

4.9.1.3 Angles of incline for stairs, ladders, and ramps. The type of structure chosen to be used should be based on the angle of the structure's inclination in relation to the available space and structural constraints. Figure 4.9.1, Preferred and critical angles for ladders, stair ladders, stairs, and ramps, shows the preferred and critical angles of incline suitable for these structures.

Figure 4.9.1. Preferred and critical angles for ladders, stair ladders, stairs, and ramps.

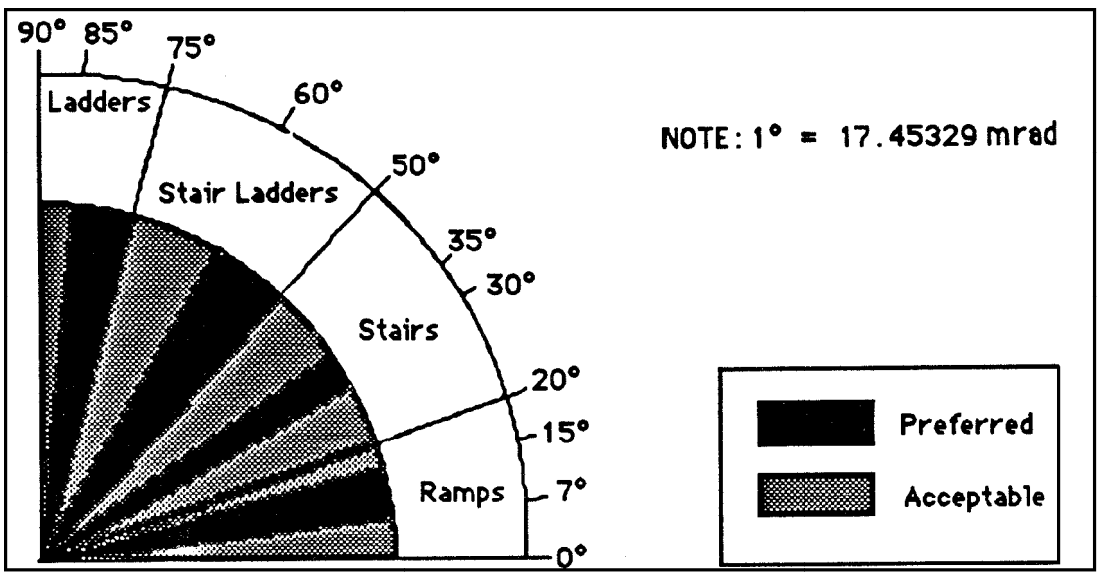

Note: Where wheelchair accessibility is a consideration, slope should not exceed 4.6°, with 3.5° as the preferred maximum, and the maximum rise being 762 mm (30 in.). Where space limitations prohibit shallower rises, the slope may go up to 5.7° for a maximum rise of any run of 152 mm (6 in.) or up to 7° for a maximum rise of 76 mm (3 in.).

4.9.1.4 General design criteria for stairs, ladders, and ramps. Stairs, ladders, and ramps should be:

a. Designed, installed, or provided to affect the most immediate and efficient access to and between work places and areas.

b. Constructed of materials which are lightweight, nonconductive, splinter-proof, waterproof, weatherproof, humidity-resistant, and resistant to chemical action.

Administrative Information Only

c. Designed to withstand the combined weights and strengths of the largest number of personnel likely to be on them at one time, multiplied by a safety factor of at least two. 97.5 kg (215 lb) per person should be used to calculate weight.

d. Provided with non-skid surfaces on all areas where personnel are expected to step, walk, or stand (See Figure 4.9.2, Recommendations for fixed and portable ladders).

e. Free of obstruction, edges, notches, or burrs which could injure personnel or damage hoses or cables.

f. Designed to be de-iced, when necessary, by using hot water or steam.

g. Adequately lighted.

h. Adequately marked against hazards in their use, e.g., against low overhead, possible shock.

i. Provided with a safety screen behind open stair designs and at landings (See also Figure 4.9.2, Recommendations for fixed and portable ladders).

Figure 4.9.2. Examples of use of safety screens behind open stairs and landings.

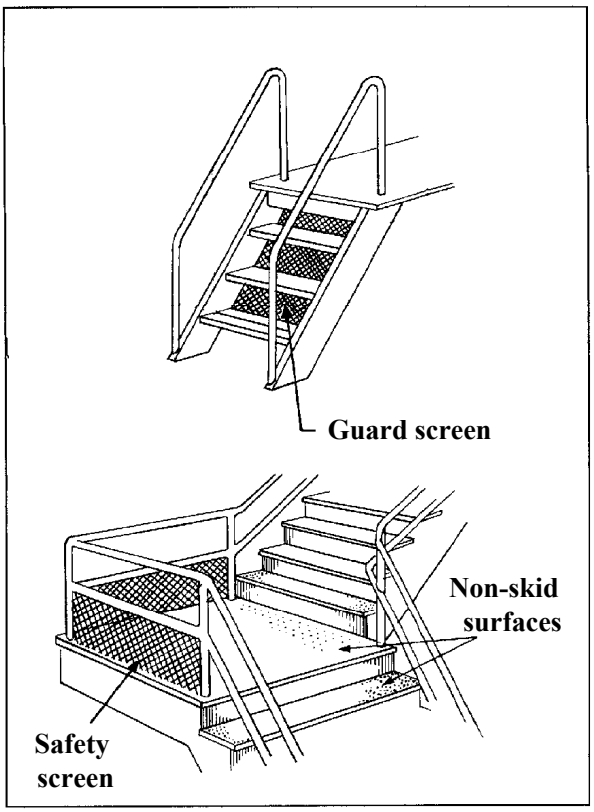

4.9.2 Recommendations for fixed and portable ladders.

4.9.2.1 Safety devices. Safety devices should be provided on either fixed or portable ladders whenever length, use, or operating conditions require. For instance, pole lashing devices should be provided for

Administrative Information Only

ladders to be used against poles, or carrier rails and safety belts should be provided for long ladders to be used in adverse weather or under emergency conditions.

4.9.2.2 Kick plates. Kick plates should be installed behind ladders for special applications where feet may damage the surface of the equipment.

4.9.2.3 Signs and decals. Metal ladders should be marked with signs or decals warning against the danger of shock. These should be placed inside the stingers, on both sides, and 3 feet from both ends and read: "**CAUTION. Do not use or store near electrical equipment.**" (See also Figure 4.9.3, Example of hazard marking on ladder)

Figure 4.9.3. Example of hazard marking on ladder.

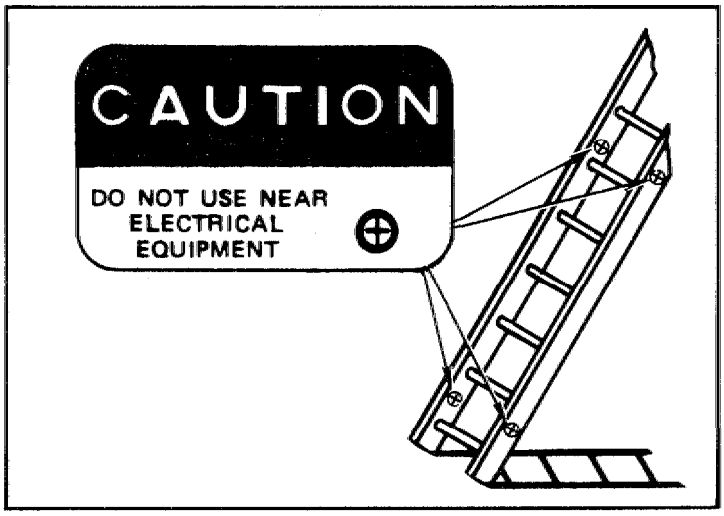

4.9.3 Design of portable ladder

4.9.3.1 Rung ladders. Portable rung ladders should have the following dimensions (keyed to Figure 4.9.4, Rung ladder dimensions)

	Minimum	Maximum	Preferred
a. Rung diameter:			
Wood	29 mm (1.3 in.)	38 mm (1.5 in.)	36 mm (1.4 in.)
Protected metal	19 mm (0.75 in.)	38 mm (1.5 in.)	36 mm (1.4 in.)
Metal that may rust	25 mm (1.0 in.)	38 mm (1.5 in.)	36 mm (1.4 in.)
b. Rung spacing:	229 mm (9 in.)	406 mm (16 in.)	279 - 305 mm (11 - 12 in.)

c. **Maximum ladder** length:

Single section ladders	9.14 m (30 ft)
Two-section, metal ladders	14.63 m (48 ft)
Two-section, wood ladders	18.28 m (60 ft)

Administrative Information Only

d. **Minimum** width between side rails:

Metal ladders	305 mm	(12 in.)
Wood ladders Up to 10 ft. long	292 mm	(11.5 in.)
Add 6 mm (.25 in.) for each added	610 mm	(2 ft) of length

Figure 4.9.4. Portable rung ladder dimensions.

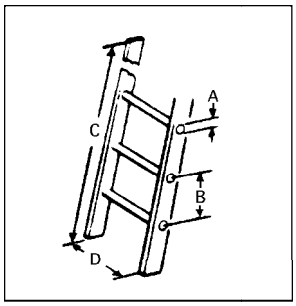

4.9.3.2 Step ladders. Step ladders should have the following dimensions (keyed to Figure 4.9.5, Step ladder dimensions):

a. Spread: 89 mm (3.5 in.) per foot length of front section plus 51 mm (2 in.) per 0.30 m (1 ft) length of back section

	Min	Preferred
b. Tread width:	76 mm (3 in.)	76 - 101 mm (3 - 4 in.)
c. Step spacing:	223 mm (9 in.)	279 - 305 mm (11 - 12 in.)

d. **Minimum** width between siderails at top step:

Metal ladders	279 mm (12 in.)
Wood ladders	290 mm (11.4 in.) of D.

e. **Maximum** length of ladder: 6.10 m (20 ft)

Administrative Information Only

Figure 4.9.5 Step-ladder dimensions.

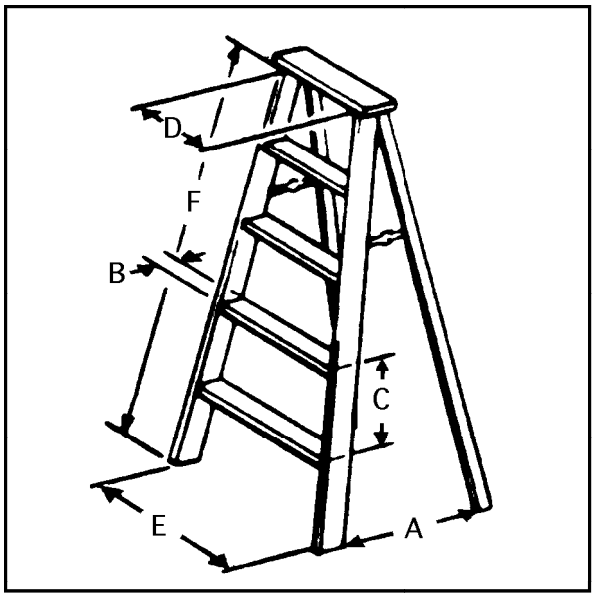

4.9.3.3 Portable ladder feet. Ladders should be provided with rubber-cleated, pivoted feet for use in non-freezing weather, and steel cleats for use in ice or snow.

4.9.3.4 Hinges and locks. Permanent hinges and locks should be used in preference to bolts and nuts for assembly of two-section extension ladders.

4.9.3.5 Metal spreader or locking device. Step-ladders should be equipped with a metal spreader or locking device of sufficient size and strength to securely hold the front and back sections in the open position.

4.9.3.6 Maximum length for portable wood ladders. The maximum length for portable wood ladders should be: step-ladders, 6.10 m (20 ft); single straight ladders, 9.14 m (30 ft); two section extension ladders, 18.29 m (60 ft); sectional ladders, 18.29 m (60 ft); trestle ladders, 6.10 m (20 ft); platform step-ladders, 6.10 m (20 ft); painter's step-ladders 3.66 m (12 ft); and mason's ladders 12.19 m (40 ft).

4.9.3.7 Maximum length for portable metal ladders. The maximum length for portable metal ladders should be single straight ladders, 9.14 m (30 ft); two section extension ladders, 14.63 (48 ft); extension ladders with more than two sections, 18.29 (60 ft); step-ladders 6.10 m (20 ft); trestle ladders, 6.10 m (20 ft); and platform step-ladders, 6.10 m (20 ft).

4.9.3.8 Non self-supporting ladders. Non self-supporting ladders should be erected on a sound base at a 4-1 pitch and placed to prevent slipping.

4.9.3.9 Ladder maintenance. Ladders should be maintained so as to be in good condition and defective ladders should be withdrawn from service.

4.9.3.9.1 Coating wooden ladders. Wooden ladders should be kept coated with a suitable protective material.

Administrative Information Only

4.9.3.9.2 Roof access. Although not the preferred means of access, when used to gain roof access the top of the ladder should extend at least 0.91 m (3 ft) above the point of contact with the roof.

4.10 Platforms, catwalks, and shelters

Platforms refer to supports which are used to provide maintenance technicians with support at a tolerable working distance to equipment.

Catwalks refer to a walkway used to provide access and to allow movement by maintainers.

Shelters are used to provide enclosure and protection of maintenance technicians and equipment during maintenance tasks.

4.10.1 General principles

4.10.1.1 Mobility requirements. Platforms, catwalks, and shelters should be permanently installed whenever possible. Where they must be mobile, platforms and shelters should be:

a. Lightweight enough for no more than two people to handle, erect, and install.

b. Collapsible or adjustable for easy handling and transporting.

c. Provided with self-locking devices for all attachments, adjustments, and collapsible supports.

d. Provided with wheels, as necessary, that should:

- Have wheel locks or brakes to insure stability.
- Be large enough to allow easy passage over ridges up to 19.0 mm (0.75 in.) high or higher.
- Provide firm grip and adequate support on slippery surfaces, snow, ice, and sand.

4.10.1.2 Stability requirements. Platforms and shelters should be

a. Provided with low centers of gravity, wide wheel bases, anchors, and/or outriggers as needed to achieve stability.

b. Properly balanced and supported to allow using without tipping when the weight of personnel and/or components is applied to any one side.

4.10.1.3 Fixture requirements. Where practical and feasible, platforms and shelters should have:

a. Electrical outlets and fixtures to provide adequate lighting and facilitate use of test equipment and powered tools.

b. Shelves or other places for resting test equipment, tools, or components at a convenient operating or working level.

c. Hooks, eyes, clip fasteners, supports, etc. to facilitate the support and connection of associated wiring, hoses, block-and-tackle arrangements, etc.

Administrative Information Only

d. Storage space, cable winders, supports, clamps, etc. to provide storage for associated manuals, slings, special tools, extension cables, etc.

4.10.1.4 Size and configuration requirements. Platforms and shelters should provide:

a. Easy passage of personnel when access doors, cowl flaps, etc. are open.

b. Adequate work space and work clearances for the maximum number of personnel and required range of tasks.

c. Easy access to all equipment, mounts, and features integrally related to the maintenance operations performed using the platform; e.g., to an engine and all its associated parts, accessories, and points of connection.

d. Safe and easy handling in these operations of all related:

- Components that are likely to be removed.
- Spare parts, tools, etc. that must be handled.
- Slings, hoses, lines, and other supports to be handled.
- Cowls, panels, or other major items that must be handled within the shelter or from the platform or stand.

4.10.1.5 Capacity. The capacity of platforms, catwalks, and shelters should exceed the heaviest combination of men and equipment to be supported at any one time. Platforms and catwalks should be proof-tested by a qualified inspector to twice the rated capacity at least annually IAW DOE-STD-1090-99, 4.1.d.4.

4.10.1.5.1 Capacity displayed. The capacity of platforms and catwalks should be displayed in pounds with high visibility labels on platforms and catwalks

4.10.2 Platforms

4.10.2.1 Minimum workspace. Platforms should provide a minimum of 0.56 sq. m (6 sq. ft) of workspace.

4.10.2.2 Both hands free for work. The platform design should allow the technician to have both hands free for work.

4.10.2.3 Continuing work surface. Platforms should provide a continuing work surface around or between related portions of the work area, e.g., the engine.

4.10.2.4 Weight capacity. The platform should be designed to have a capacity in excess of the heaviest combination of persons and/or equipment to be supported at any one time. Use 97.5 kg (215 lb) per person to calculate weight. A minimal capacity of one ton in recommended.

Administrative Information Only

4.10.2.5 Conform to work surface. The platform should conform closely to the work surface.

a. General conformation should be within 51 mm (2 in.)

b. Gaps greater than 152 mm (6 in.) are normally objectionable.

c. Contact plates, cushions, bumpers, or pads should be provided as necessary to protect equipment surfaces.

4.10.2.6 Open metal grating. The surfaces of exterior platforms and work areas should be constructed of open metal grating. When this is impractical (for example, when small items might fall through the grating or electrical shock might result) non-skid materials should be used

4.10.3 Catwalks

Catwalks should have non-skid surfaces and handrails, midrails and a toeboard (or a screen) on all sides conforming to the dimensions shown in Section 4.10.5, Guardrails and handrails. A model catwalk with recommended minimum width is shown in Figure 4.10.1**,** Example of a catwalk**.**

4.10.4 Shelters

4.10.4.1 Time to install and enclose. Time to install and enclose the shelter should be minimal and should not exceed one hour.

4.10.4.2 Enclosure and protection. Maximum practical enclosure and protection should be provided in terms of the environment in which the shelter is to be used.

4.10.4.3 Ventilation and environmental control. Ventilation and environmental control should be within tolerable limits, considering the type of clothing to be worn

4.10.4.4 Side by side use. Shelters should be designed so that they can be used side by side where appropriate.

4.10.4.5 Covered openings. Covered openings should be provided as necessary to facilitate removal of major components such as complete engines.

4.10.4.6 Compatibility with support equipment. Shelters should be compatible with, provide openings for, and allow employment of associated support equipment such as cranes, stands, slings, etc.

4.10.4.7 Non-interference with related maintenance. Shelter design should not interfere with operations essential to related maintenance.

4.10.5 Guardrails and handrails.

4.10.5.1 Provision of guardrails. Guardrails should be provided for:

a. Stationary platforms which should also have a midrail and screening or a toeboard

b. Mobile platforms with a top step height equal to or exceeding 1.2 m (4 ft.) to 3.0 m (10 ft.).

Administrative Information Only

c. Mobile platforms over 3.0 m (10 ft.) height should have guardrails with a midrail and with toeboards (or screening or lattice work) provided on the exposed sides and on the ends of the platform

Figure 4.10.1. Example of a catwalk.

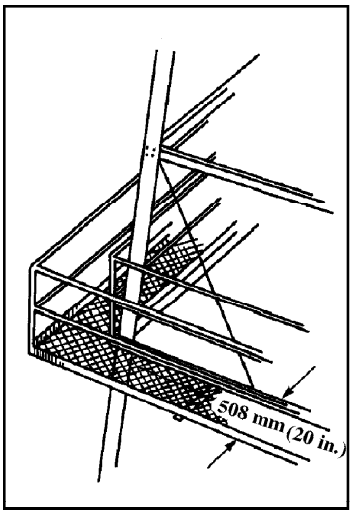

4.10.5.2 Guardrail dimensions. Guardrails should have the dimensions specified in Figure 4.10.2, Critical dimensions for guardrails.

a. Width of clear space for access: 610 mm (24 in.)

b. Height of midrail: 533 mm (21 in.)

c. Height of upper rail: 1067 mm (42 in.) minimum - fixed platform
965 - 1125 mm (39 - 45 in.) - mobile platform

d. Thickness of guardrail: 19 mm - 76 mm (0.75 in.-3.0 in.)

e. (Not shown) Toeboard or screen height: 76 mm (3 in.) minimum

4.10.5.3 Hydraulically -operated boom platforms. Hydraulically-operated boom platforms other than buckets or baskets should include a guardrail system with the top rail 990-1143 mm (39-45 in.), and a midway rail and toeboards at least 102 mm (4 in.) high on all sides. (The toeboards may be omitted at the access opening.)

Administrative Information Only

Figure 4.10.2. Critical dimensions for guardrails.

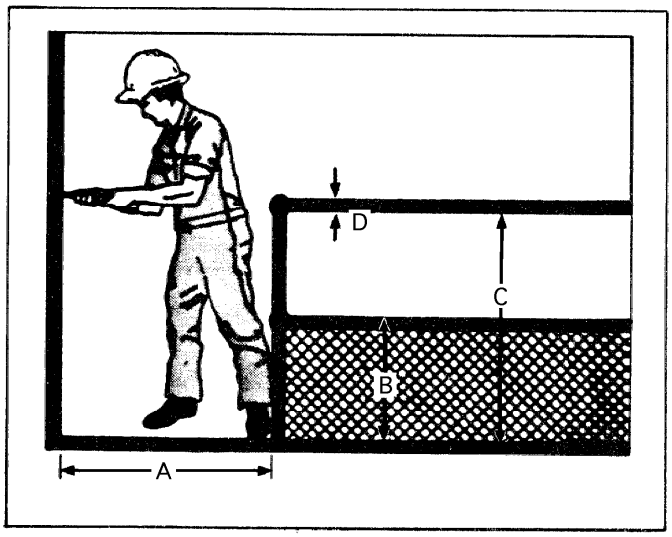

4.10.6 Hand holds. Hand holds should be furnished where needed.

4.11 Hatches.

4.11.1 Configuration. Wall hatches should be flush with the floor where structural considerations will permit this arrangement. Hatches should open with a single motion of the hand or foot.

4.11.2 Force requirements. When a handle is used for unlocking a hatch, the unlocking force required should not exceed 90 N (20lbf). Hatches placed in the overhead position should require no more than 220 N (50lbf) for opening and closing; hatches should be operable by a suitable equipped and clothed user with 5th percentile arm and hand strength. The force of gravity should be used, for ease of opening, where possible.

4.11.3 Whole-body access. Dimensions for rectangular access openings for body passage should not be less than those dimensions shown in Figure 4.11.1, Whole-body access opening. Minimum diameter for circular hatches should be 760 mm (30 in.). These dimensions should be adjusted to accommodate personnel wearing bulky clothing or protective suits. Where personnel may carry equipment through the hatch, allowances should be made for clearance of the equipment and arm and shoulders in the position required to hold the equipment. Where rescue personnel may be required because of environmental hazards (e.g., toxic fumes) within the work place, larger access openings for two-person ingress and egress may be necessary. Where “step down” through a top access exceeds 690 mm (27 in.), appropriate foot rests or steps should be provided.

Administrative Information Only

Figure 4.11.1 Whole body access opening

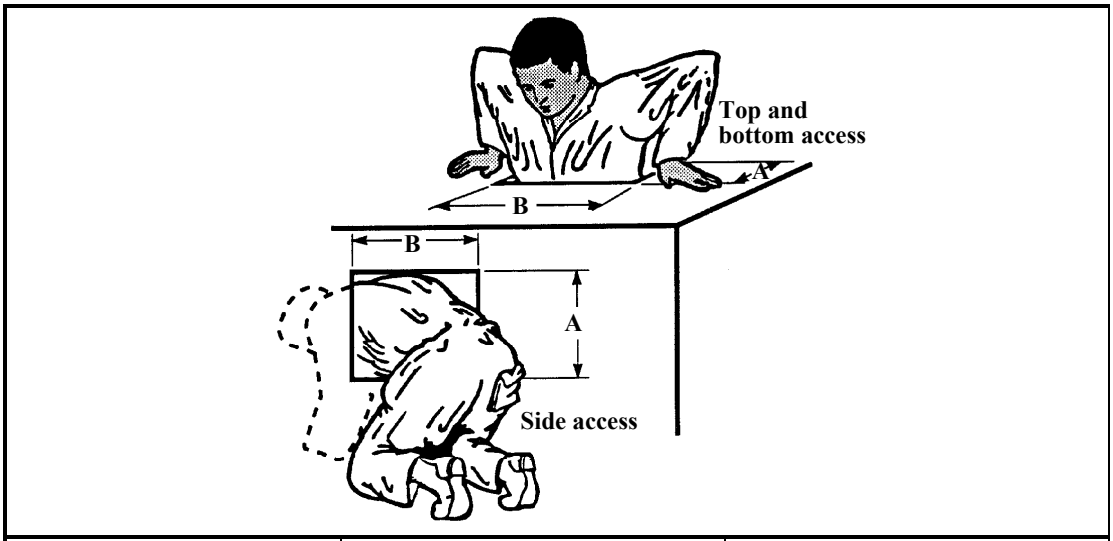

Dimensions	A. Depth/height		B. Width	
Clothing	**Light**	**Bulky**	**Light**	**Bulky**
Top and bottom access	330 mm (13 in.)	410 mm (16 in.)	580 mm (23 in.)	690 mm (27 in.)
Sided access	660 mm (26 in.)	740 mm (29 in.)	760 mm (30 in.)	860 mm (34 in.)

4.11.4 Floor mounted hatches. Floor-mounted hatches should be deep enough to accommodate personnel wearing encumbering clothing and equipment with the actual depth of the hatch depending on the angle, "X", of the ladder leading to the hatch. In general, the greater the angle X, the greater hatch depth should be. This is summarized by the rule of thumb equation hatch depth should equal 610 mm (24 in.) or 1930 (tan X) mm [76 (tan X) in.] whichever is greater.

Administrative Information Only

Figure 4.11.2. Floor-mounted hatch.

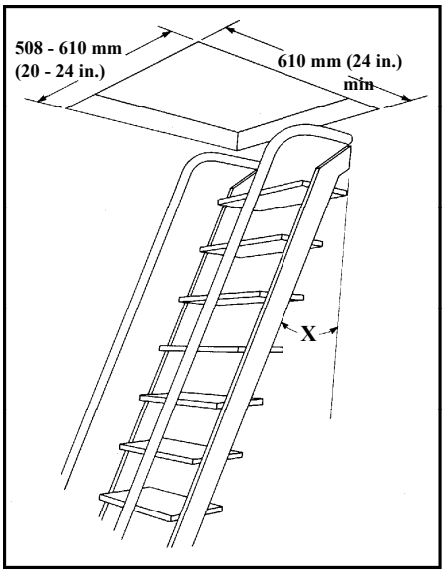

4.12 Communication equipment and procedures

4.12.1 Paging and announcing system design guidance.

4.12.1.1 Range of coverage. Paging and announcing systems used for maintenance personnel should have sufficient coverage so that members of the work force can be alerted reliably and without excessive attempts under all plant conditions.

4.12.1.2 Placement of loudspeakers. When loudspeakers are used, coverage should be provided for all areas where the work force may have to be reached. Speakers should be placed with a space so that their number, location, and amplitudes provide an adequate signal to all relevant workers therein. Generally, an articulation index (AI) of 0.7 or greater is recommended to accommodate the range of workers and conditions including those which could involve stressful conditions; however some maintenance applications involving only skilled workers and limited time stress may only require an AI of 0.5 or higher (See also Section 4.12.6.4, Intelligibility tests, and related subsections of this document).

4.12.1.3 Use of alternative communication systems. Except under limited conditions mentioned in 4.11.1.2, when an AI of 0.7 is not feasible, such as in particularly noisy areas, alternative communication provisions should be provided.

4.12.1.4 Echoes. To reduce echoes in confined spaces where reducing sound reflection is not practical, many low powered speakers should be used instead of a few high powered ones. Maximum speaker range (and distances between speakers) in these reverberant spaces should not exceed 15.24 m (50 ft.).

4.12.1.5 Zone paging systems. Zone paging systems in which the site is divided into several zones and the page is only broadcast into the zone(s) in which the maintainer is most likely to be found may be used to reduce the number of pages heard in any single location with reducing breadth of coverage; however, zones must be selected to make contact with maintainers being paged highly likely. If the zones cannot be defined so as to significantly reduce the number of pages within a zone while assuring a high probability of contacting parties of interest, then the zone system should not be used.

Administrative Information Only

4.12.1.6 Personal page devices. To avoid excessive use of the public address system and to reach maintainers outside of plant locations covered by the public address system, personal paging devices suitable for high noise and remote areas should be provided to mobile key personnel.

4.12.1.7 Page station locations and accessibility. Page stations at which personnel may initiate pages should be located so that time required for access by maintenance personnel does not generally exceed 30 seconds and so that the sound environment does not introduce excessive noise and feedback. Sound shielding should be provided when ambient noise exceeds 90 dB.

4.12.1.7.1 Speaker location in relation to page stations. Speakers should be located and oriented to avoid feeding into microphone; very close speakers should be muted when the microphone is used.

4.12.1.7.1 Telephone access to the paging system. In addition to dedicated paging stations for making announcements, telephone access to the paging system through dialing an assigned number may be provided.

4.12.1.8 Restricted access to paging systems. Design features or administrative controls such as magnetic card access or a record keeping feature that will identify the originating station should be provided to limit or trace unauthorized or excessive paging.

4.12.2 Two way communication systems

4.12.2.1 Capacity requirements for page party systems. For page party systems which the maintainer may use to make public address announcements as well as to carry on point-to-point conversations, generally a minimum of 5 channels should be provided to avoid excessive waiting for a free channel.

4.12.2.2 Dedicated lines. Dedicated lines for frequent or lengthy maintenance communications should be provided. In cases where extended task may constitute the only communications needed from a particular location or where these tasks are infrequent, sound-powered phone jacks may be installed in lieu of page-party or regular telephone stations to avoid congestion on those systems.

4.12.2.3 Locations for telephones and page party stations. Telephones and page party stations should be located so that time and effort required for access by maintenance personnel is not excessive and so that stations are in areas of relative quiet. A 30 second reach time is desirable for a public address page and 60 seconds should be the maximum time required.

4.12.2.3.1 Use of Hear-Here and telephone booths. Where stations must be located in noisy areas, sound barriers such as Hear-Here booths should be provided. In very noisy areas, full-length, acoustically designed, fully enclosed telephone booths should be used.

4.12.4 Communications systems for use with protective suits. Workers enclosed in protective suits should be provided with auditory communication capabilities. Pairs of worker in bubble suits may uses special headsets and voice actuated boom microphones for short range communication. Specially designed radio systems may be used for longer range communication.

4.12.5 Adapting communication practices to user capabilities

4.12.5.1 Protecting and monitoring maintainers. Noisy areas, above 90 dB(A) for safety and above 85 dB(A) where speech intelligibility is also a factor, should be posted as “hearing protection required,”

Administrative Information Only

maintainers should be trained to use hearing protection devices in these areas, and maintainers should be given annual audiometric tests to detect hearing loss.

4.12.5.1.1 Use of earplugs. In addition to retarding hearing loss caused by noise exposure, earplugs and over-the ear protective devices generally improve intelligibility in noisy environments of greater than 85 dB(A). Signal amplitudes can also be increased slightly beyond otherwise annoying levels if all workers are wearing protective devices.

4.12.5.2 Use of formal communications procedures. Communications training should be provided as a method of improving efficiency and reliability of communications. For example, using familiar vocabularies and phrases familiar to both parties can decrease the required signal-to-noise ratio 10 to 15 dB below that needed to convey unfamiliar terms.

4.12.6 Communication system reliability and maintenance.

4.12.6.1 Choosing communications systems for reliability. Communications systems should be chosen for reliable operation in the settings in which they will be used.

4.12.6.2 Back-up systems. Back up power supplies and temporary or back up communication systems should be considered for providing backup communication when the primary system fails. Their use should be a part of administrative procedures covering communication in maintenance activities.

4.12.6.3 Periodic testing programs. Communication systems should have design features that support testing for operability such as battery checks and insulation resistance checks and “power available” lights to loudspeakers. Administrative procedures should provide for periodic system testing.

4.12.6.4 Intelligibility tests. For activities involving difficult but critical communications, the system should be tested for speech intelligibility. Situations requiring such testing, the actual conduct of such tests, and the criteria for successful completion should be specified in applicable administrative procedures.

4.12.6.4.1 Methods for assessing speech intelligibility. When information concerning the speech intelligibility of a system is required, one or more of the three following recommended methods should be used with the appropriate selection being dependent upon the requirements of the test:

a. The ANSI standard method of measurement of phonetically-balanced (PB) monosyllabic word intelligibility, (ANSI S3.2) should be used when a high degree of test sensitivity and accuracy is required.

b. The modified rhyme test (MRT) may be used if the test requirements are not as stringent or if time and training do not permit the use of the ANSI method.

c. The articulation index (AI) calculations should be used for estimations, comparisons and predictions of system intelligibility based on ANSI S3.5

4.12.6.4.2 Intelligibility criteria. The intelligibility criteria shown in Table 4.12.1, Intelligibility criteria for voice communication systems, should be used for voice communication. The efficiency of communications needed and the function of information to be transmitted should determine which of the three communication requirements in Table 4.12.1 should be used.

Administrative Information Only

Table 4.12.1. Intelligibility criteria for voice communication systems.

Communication requirement	Score*		
	PB	MRT	AI
High intelligibility; separate syllables understood	90%	97%	0.7
Acceptable intelligibility for some conditions and tasks; about 98% of sentences correctly heard; single digits understood	75%	91%	0.5

* PB - phonetically balanced, MRT - modified rhyme test, AI - articulation index

Administrative Information Only

INTENTIONALLY BLANK

Administrative Information Only

5.0 MAINTENANCE AIDS

Maintenance aids, as used in these guidelines, refers to informational sources or tools such as procedures, manuals, instructions, and job aids (e.g., flow diagrams, schematics, drawings, decision trees, used by the maintenance technician to perform his/her job.

5.1 General guidelines

5.1.1 Use of procedures. To avoid trial-and-error performance by technicians, each maintenance operation should be covered by a procedure(s) prepared and tested during the development of the system.

5.1.2 Redundancy. Information contained in procedures, manuals, instructions, and job aids should not be excessively redundant between the different maintenance aids used by the maintainer or with information the technician already possesses.

5.1.3 Compatibility with personnel capabilities and environmental conditions. Maintenance information should be compatible with the capabilities and limitations of the personnel which will be using it and with the anticipated environmental conditions, equipment characteristics, and task requirements.

5.1.4 Safety factors. Maintenance instruction should not require the technician to work near dangerous voltages or delicate components. Procedures, which require work to be performed in areas of contamination, should always specify the protective equipment and measures necessary to work safely in this environment.

5.1.5 Maintenance or test supports, rests or stands. Maintenance or test supports, rests or stands which may be used to hold technical orders, manuals, or procedures should be provided when required. When permitted by design requirements, such rests or stands should be part of the basic unit, rack, or console chassis.

5.1.6 Size and binding. Conditions under which procedures and technical manuals may be used include lack of laydown space, heat, and humidity; consequently the procedures should be sized and bound accordingly. If only certain pages need to be taken to a site, the technical manual may be bound in a loose-leaf binder so that the appropriate pages can be removed. If the pages are to remain in the manual binder, then they should lie flat by themselves when the manual is open.

5.1.7 Preparation and review of maintenance aids

5.1.7.1 Aids based on systematic analysis of tasks. Maintenance aids should be based on a systematic analysis of the tasks which are required in the performance of the maintenance activity.

5.1.7.2 Personnel preparing and reviewing aids. Maintenance aids should be prepared and/or reviewed by personnel who are knowledgeable in techniques of instructional preparation and the technical subject covered by the information.

5.1.7.3 Verification. The procedure should be evaluated or “verified” to confirm that it is written correctly according to the guidelines listed below for procedure presentation and format and to ensure its technical accuracy in accordance with plant specific documents and standards.

Administrative Information Only

5.1.7.4 Validation. Maintenance information should be validated by means of field tests to ensure clarity, comprehensives, and effectiveness.

5.1.8 Revising maintenance aids. Maintenance aids should be kept current with equipment. Whenever new equipment or modifications to equipment are introduced, old maintenance information should be revised to reflect these changes.

5.1.9 Vendor development of technical manuals. Users should specify what they want in their equipment technical manuals just as they specify what they want for their equipment. The vendor should assure that development of technical manuals is incorporated into the equipment design process and that they are based on a systematic analysis of user needs and that they are properly validated.

5.1.10 Vendor manual revisions. When making a revision, a vendor should update an entire section rather than send addenda pages that require turning back and forth and that can be easily lost. The user should ensure that vendor manual revisions are received from the vendor and that they are properly incorporated into maintenance procedures. When entering revisions, utilities should remove all old materials to avoid confusion and should ensure that copies are distributed to the proper people.

5.2 Maintenance procedures.

5.2.1 Recommended features. Some of the more important features that should be incorporated into maintenance procedures are

a. Maintenance procedures should be as brief as possible without sacrificing necessary information. They should contain only job-relevant information.

b. Procedures should be as self-contained as possible. The content and structure of procedures should minimize the need for consulting other references.

c. Instructions should be prepared specifically for each organizational level (i.e., field, shop, factory) of maintenance and each skill level of maintenance technician required to perform the work rather than for all levels being combined.

d. Procedures should provide unambiguous instructions.

e. Procedures should have nomenclature that is used on the equipment.

f. Required tolerances should be realistic for the level of maintenance being performed (i.e., field tolerances, shop or factory tolerances, new part tolerances, replacement part tolerances, in-service tolerances).

g. Procedures should be easy for the technician to follow. Ideas and words should be as simple to comprehend as possible. Procedures sometimes can be simplified by designing test equipment to do some or all of the programming or sequential operations.

h. Procedures should list tagging and switching instructions in the initial portions of the procedures.

i. The number of decisions required to be made by the technician should be kept as few as reasonable and these should be as straightforward as possible.

Administrative Information Only

j. Exact, step-by-step procedures should be used (compared to narratives). This form will allow inexperienced technicians to learn the procedure easily.

k. Each procedure, if necessary, should explain how to start up and shut down the equipment.

l. Systematic troubleshooting procedures should always be provided for the technician. Failure to do this may result in the technician following inefficient or even dangerous methods.

m. Pages should be numbered "- of -" for recognition of missing pages of a procedure.

n. All requirements for completing the procedure including personnel, reference documents (e.g., specifications, drawings, and where necessary, other procedures)., tools, parts, materials, and safety precautions pertaining to use of a procedure should be listed in the initial portions of the procedure.

5.2.2 Sequence of presenting information. Procedural information in technical manuals and maintenance procedure should be presented in the following sequence:

a. Title page

b. Table of contents

c. Purpose and scope

d. References

e. Requirements- tools, test equipment, materials, and personnel

f. Precautions and limitations

g. Main body

h. Follow-on maintenance

i. Records

j. Attachments

5.2.2.1 Title page. The title page should contain the following identifying information:

a. Title (Should indicate applicable equipment and type operations performed)

b. Revision date

c. Approval status

d. Indexing designation or code.

5.2.2.2 Presentation for purpose and scope. The purpose of the procedural information should be stated under “Purpose and Scope” along with a complete description of the applicable equipment. An Example for the purpose and scope section is shown below in Figure 5.2.1, Example of purpose and scope section.

Administrative Information Only

Figure 5.2.1. Example of purpose and scope section.

1.0 PURPOSE AND SCOPE

1.1 This procedure covers the steps for replacing a main steam dump valve pneumatic actuator. This includes the following subtasks:

Access valve actuator
Remove accessories
Remove valve actuator to valve body
Mount actuator to valve body
Install accessories
Perform additional maintenance requirements

1.2 This procedure is applicable to any Fisher pneumatic control valve, type 667-EWP, size 8 inches x 6 inches, size 87 actuator, with a top mounted handwheel.

5.2.2.3 References. The following items should be listed under references:

a. Sources that will give the user a deeper understanding of the procedure tasks.

b. References that are called out in procedural steps and drawings, flow charts, etc. that **are needed** by the user to perform the procedure (Source data used to develop the procedure but not needed otherwise should not be listed).

5.2.2.4 Requirements - tools, test equipment, supplies, and personnel. Required tools, test equipment, and supplies should be listed in a separate section (See also Figure 5.2.2, "Example of tools and supplies section"). Requirements should also be stated at the outset of a procedure for the number, level, and types of maintenance personnel required to accomplish the tasks described by the procedure.

Figure 5.2.2 Example of tools and supplies section.

3.0 TOOLS AND SUPPLIES

3.1 Tools

Bar, priming, fuel pump (tool # 455)
Ladder, extension 12 foot
Tool, extraction, nozzle (tool # 410)
Wrench, crowfoot, 1 inch

3.2 Supplies

Bags, plastic, self-locking (Ziplic or equivalent)
Lubricant, O-ring (stock # 77-1385)
Nozzle, injector (replacement) P/N 66408-1)
Tags, part identification

Administrative Information Only

5.2.2.5 Precautions and limitations. General equipment and personnel safety instructions to be followed while using the procedures should be listed in a separate section (See also Figure 5.2.3, Example of a precautions and limitations section).

Figure 5.2.3. Example of a precautions and limitations section.

4.0 PRECAUTIONS AND LIMITATIONS

4.1 Be sure that the diesel requiring maintenance remains de-energized and isolated during this procedure to prevent bodily injury and/or equipment damage.

4.2 Be sure that system cleanliness is maintained at all times when performing this procedure.

4.3 This maintenance action could reduce plant operating capacity if surveillance requirements are not maintained.

5.2.2.6 Prerequisites. The precautions and limitations should also include equipment, unit or station conditions that should be satisfied prior to performing the procedural tasks (See also Figure 5.2.4, Example of a list of prerequisites).

Figure 5.2.4. Example of a list of prerequisites.

4.8 This procedure may be performed with the plant in any mode of operation.

4.9 Protection cabinets for Channels II, III, and IV must remain closed when at power.

4.10 Equipment must have been energized for at least 15 minutes prior to performing this procedure.

5.2.2.7 Main body

5.2.2.7.1 Use of multilevel text. Multilevel text may be used in the main body to provide both high- and low-experience users with sufficient information to perform the procedure effectively. Techniques that may be used to provide multilevel text are:

a. Highlighting - Key words or phrases should be highlighted within a task step, enabling the experienced person to pick out only the required information without reading through the entire step. Key information for the experienced person may include tolerances, measurements, time, and other pertinent data (See also Figure 5.2.5, Example of highlighting).

Figure 5.2.5. Example of highlighting.

8.7 Join cooling water tubes together by sliding hose couplings in place.
Tighten those clamps between 10 and 15 inch-pounds. Safety-wire clamps to cylinder head.

8.8 Coat new o-rings with lubricant, Dow Corning 602; then, slide them into grooves of nozzle body. Be sure o-rings are properly seated and not twisted.

Administrative Information Only

b. Subtask command technique - In the subtask command technique, subtask titles should be written as commands that the high-experience maintainer can use. Each subtask command should be followed by related steps that detail the task (See also Figure 5.2.6, Example of the subtask command technique).

Figure 5.2.6. Example of the subtask command technique.

7.1 INSTALL NOZZLE TIP GASKET

7.1.1 Using gasket installation tool (P/N 622-1), install new nozzle tip gasket on tip assembly. Be sure that flat surface of gasket fits tightly against tip nut.

5.2.2.7.2 Callouts. Illustrations should be keyed to text through either the numbered callout or direct call-out technique. These techniques are described below:

a. Numbered callouts - Numbered callouts should be numbered either sequentially in the text or sequentially on a drawing. Sequential numbering in the text has the disadvantage that it results in the scattering of callouts on the illustration and may require searching the illustration for the callout (See also Figure 5.2.7, Numbered callouts).

5.2.2.7.3 Use of caution statements. Maintenance or test practices, procedures, or conditions that may result in hazards or injury to personnel or damage to equipment should be presented in the form of caution statements.

5.2.2.7.4 Use of note statements. Maintenance or test practices, procedures, or conditions of special interest or importance that will aid in or simplify job performance should be presented in the form of note statements.

5.2.2.7.5 Recommended features of caution and note statements. Caution and note statements should:

a. Be located with the material to which it applies.

b. Stand out on a page full of other material (See also Figure 5.2.9, Example of a caution statement made to stand out).

c. Direct callout technique - Noun name identifiers should be placed next to the appropriate pictured item. This technique eliminates some of the layout and referencing problems associated with numbered callouts (Figure 5.2.8).

d. Attract the user's eye, but not be overpowering.

e. Be apparent to the user no matter what method is used to access information and enter the manual.

f. Contain all necessary information.

g. Be easy to read and understand

h. Not contain procedural steps.

Administrative Information Only

Figure 5.2.7. Numbered callouts.

8.0 Adjustments of Nozzle (continued)

8.5 Connect test pump and tubing (5 and 6) to fuel inlet port (7) of nozzle (8) with plexiglass spray shield in position.

8.6 Operate test pump (5) while turning adjustment screw (9) until nozzle opens (sprays fuel) between 3450 and 3550 psig. Record set pressure as "AS LEFT" pressure on Data Sheet.

****
ENTER ON DATA SHEET
****

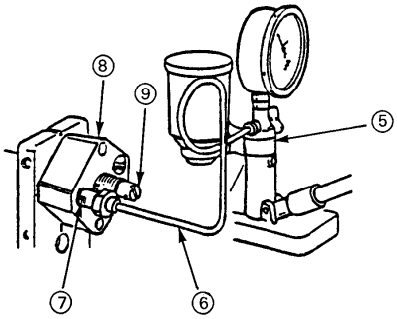

Figure 5.2.8. Direct callouts.

7.5 Adjust intermittent gear as follows:

7.5.1 If rotor has not yet turned 90° and closes contacts, turn intermittent gear slot clockwise (CW) until rotor turns 90°.

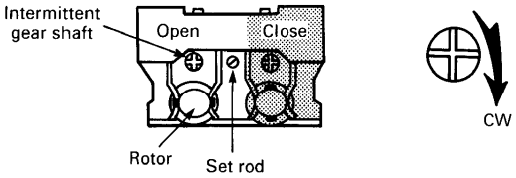

Figure 5.2.9. Example of a caution statement made to stand out.

****
* **CAUTION** *
****

Keep hands away from nozzle tip during spray test. Spray may puncture the skin, which would result in blood poisoning. If skin puncture occurs, turn off spray and contact plant physician immediately.

5.2.2.7.6 Information included in caution statements. Caution statements should include the following information, when applicable:

a. The specific nature of the hazard.

b. The steps to be taken to avoid or minimize the hazard.

c. The location or source of the hazard.

d. The consequences of failing to heed the warning or caution.

e. Corrective or first-aid actions to be taken if the hazard materializes.

f. Time considerations when critical.

g. Maintenance or test information which should be brought to the user's attention.

5.2.2.7.7 Location of caution and note statements. Caution and note statements should be placed according to the following guidelines:

a. Caution statements should precede and appear on the same page as the text or procedural steps to which they apply.

b. A note statement may precede or follow a procedural statement to which it applies

c. When it is necessary to precede a procedural step with both caution and a note statements, the caution statement(s) should appear first.

d. General caution statement(s) should be placed at the beginning of the procedural steps, or on a "Precautions" page at the front of the procedure or manual.

5.2.2.7.8 Check off. When required by plant policy or for steps in the procedure in which an error of omission is detrimental, a space should be included in the main body for initialing. Checklists should also be provided for lengthy prerequisites or tests to indicate that each step has been completed; however, very long checklists should be avoided since users may tend to avoid them and sign them off after completion of the entire procedure (See also Figure 5.2.10, Example of a double check list for an independent observer).

5.2.2.7.9 Referencing of other sources. To avoid distraction and interruption of work flow referencing of other sources in the main body should be kept to a minimum.

5.2.2.7.10 Conditional statement. The user should be sent to the correct step when a conditional statement is made in the main body (See also Figure 5.2.11, Example of conditional statement in step and as a note).

Administrative Information Only

Figure 5.2.10 Example of a double checklist for an independent observer

#1 Initials	#2 Initials				
		4.0	**Procedure**		
____	____		4.1	Verify main steam lines are blocked.	
____	____		4.2	Verify steam generator level between 75% and 90% (wide range)	
			NOTE:	If level is less than 75%, fill steam generator to 75% using Auxiliary Feed System.	
			4.3	Perform the following valve line-up:	
			CLOSE OR VERIFY CLOSED		
____	____		4.3.1	2-MS-158	Chain Valve to Aux. Feed
____	____		4.3.2	2-MS-377	2-MS-158 Bypass
____	____		4.3.3	NRV-MS-202C	Isolation to Decay Heat Release
____	____		4.3.4	TV-MS-201C	M.S. Trip Valve
____	____		4.3.5	2-MS-155	M.S. Trip Valve Bypass
____	____		4.3.6	PRV-MS-201C	Power Operated Relief
____	____		4.3.7	2-MS-208	M.S. TV Trap Isolation
____	____		4.3.8	2-MS-149	M.S. TV Trap Isolation
____	____		4.3.9	2-MS-152	M.S. TV Trap Bypass
____	____		4.3.10	TV-BD-200E	Inside TV
____	____		4.3.11	TV-BD-200F	Outside TV
			NOTE:	It is the intent of the below steps to compress the vapor contained in the steam generator thereby increasing steam generator pressure to determine the location of the tube leak(s). However, it may be required to completely fill the steam generator and main steam lines to obtain sufficient pressure.	
			CAUTION:	MONITOR STEAM GENERATOR PRESSURE THROUGHOUT THE TEST. 760 PSIG MAX. PRESSURE.	
____	____		4.4	Start one (1) Auxiliary Feed Pump.	
____	____		4.5	Using Auxiliary Feed MOV's for "C" steam generator maintain feed flow approximately 140 gpm.	
____	____		4.6	Monitor steam generator pressure and level.	
____	____		4.7	Check for tube leakage on primary side.	

Administrative Information Only

Figure 5.2.11. Example of conditional statement in a step and as a note.

Conditional Statement in Step

(1) Loosen setscrew and slide de-clutch lever off de-clutch shaft. If de-clutch lever is difficult to remove, do step 2; otherwise go to step 3.

Conditional Statement as NOTE

(2) Operate handpump until pressure gauge reads 2500 psig and hold hand pump handle stationary. Record time it takes pressure to drop to 1000 psig.

```
*************************
*          NOTE         *
*************************
```

- If the time is less than 10 seconds, do steps 4 through 6; then return to step 3.
- If time is 10 seconds or MORE, condition is normal; do step 3.

5.2.2.7.11 Space for recording data. Where applicable, space should be provided for the user to record instrument readings, measurements, and calculated values in the main body (See also Figure 5.2.12, Example of data table).

Administrative Information Only

Figure 5.2.12. Example of a data table.

CAL-CN-025
6-30-77

DATA TABLE

Sys: Condensate Storage Tank (300,000 Gal.) Tested: _____ Date: _____
Sub Sys: Channel L-CN204 Verified: _____ Date: _____
Procedures: LT-CN024, Magnetic Amplifier Controller DVM: _____
Decade Box: _____

LT-CN204 Inches H_2O	LS-CN204A Input Des. v	Act. v	Error v	LI-CN204 Des. %	Act. %	Error %	LR-CN204 Pen #2 Des. %	Act. %	Error %
20.5	1.183	____	____	4.6	____	____	4.6	____	____
111.9	2.000	____	____	25	____	____	25	____	____
223.75	3.000	____	____	50	____	____	50	____	____
335.6	4.000	____	____	75	____	____	75	____	____
447.5	5.000	____	____	100	____	____	100	____	____
223.75	3.000	____	____	50	____	____	50	____	____
20.5	1.183	____	____	4.6	____	____	4.6	____	____

Noise measurement: _____mv @ _____ma

Notes or Comments:

Magnetic Amplifier

		Des.	Act.	Error
Actuation: De-energize on Hi: Contact No. 11 & 13; 39 feet in a 39 feet span	Bias:	4.900v	____	____
	Defense:	4.750v	____	____
	Alarm/Interlock Actuated:		____	

Notes or Comments:

Controller

	Des.	Act.	Error
Gain:	1.0	____	____
Reset Time:	20 seconds	____	____
Rate Time:	Off	____	____

Notes or Comments:

Reviewed: _____ Date: _____

5.2.2.7.12 Format for use with illustrations. The main body should be formatted so that the least amount of searching is required between text and illustrations. Examples of formats that can be used to achieve this objective are:

a. Direct cue/response - Each object (cue) to be manipulated is shown graphically and is identified by a leader line pointing to the object along with an identified step number. The action to be taken (response) is written in concise language directly alongside the object (See also Figure 5.2.13, Direct cue/response format).

Administrative Information Only

Figure 5.2.13. Direct cue/response format.

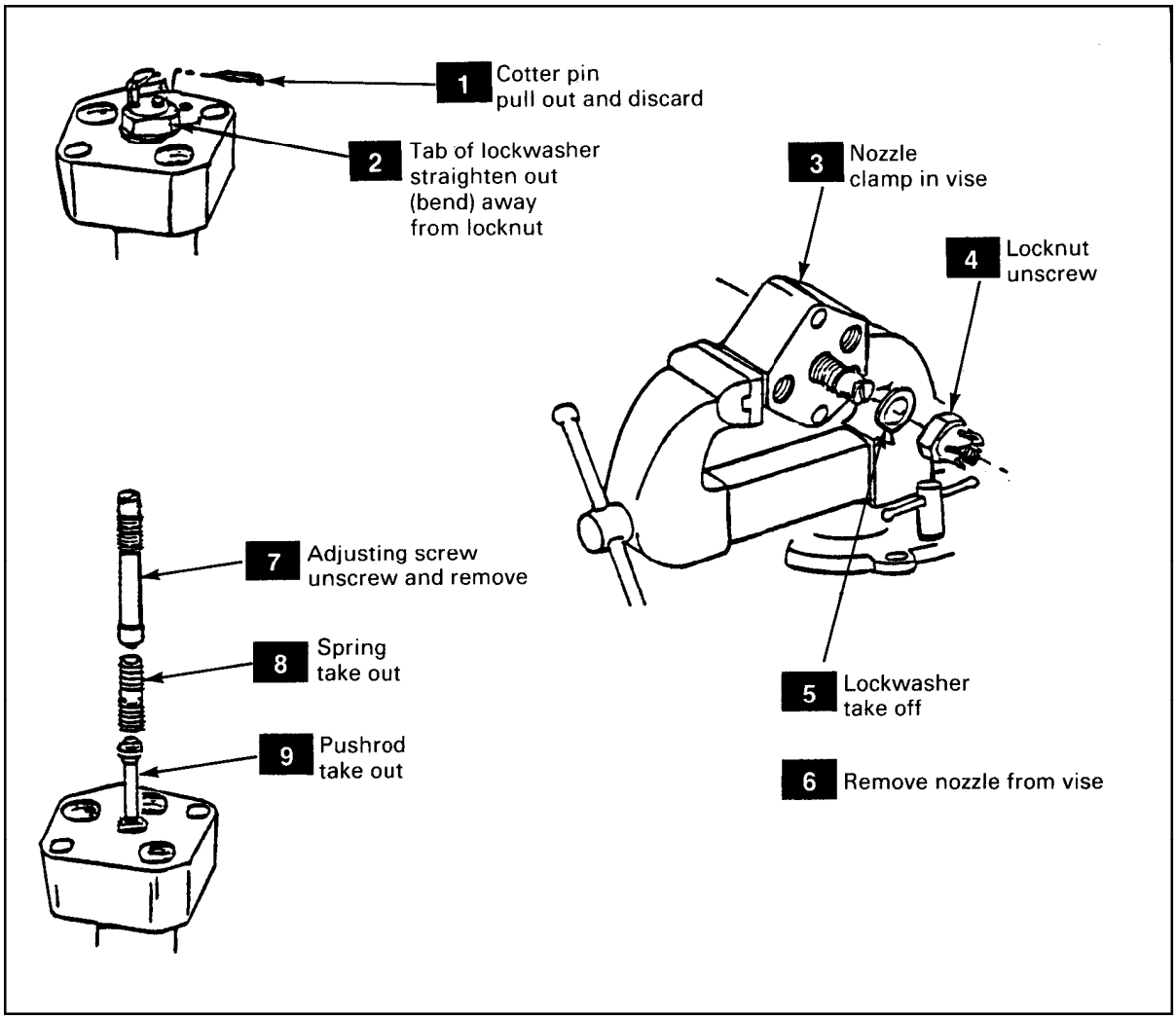

b. Running text with integrated art - Procedural steps are arranged in the upper half of the page with supporting graphics on the bottom half of the page (See also Figure 5.2.14, Running text with integrated art format).

Figure 5.2.14. Running text with integrated art.

7.0 Disassembly of Nozzle

7.1 Pull out and discard cotter pin (1).

7.2 Straighten out (bend) tab of lockwasher (2) away from wrench flats of locknut (3).

7.3 Clamp head of nozzle (4) in soft-jaw vise. Unscrew locknut (3). Take off and discard lockwasher (2).

7.4 Remove nozzle (4) from vise; then, unscrew adjusting screw (5).

7.5 Take out spring (6) and pushrod (7).

7.6 Put all loose parts (3, 5, 6, 7) into storage bag.

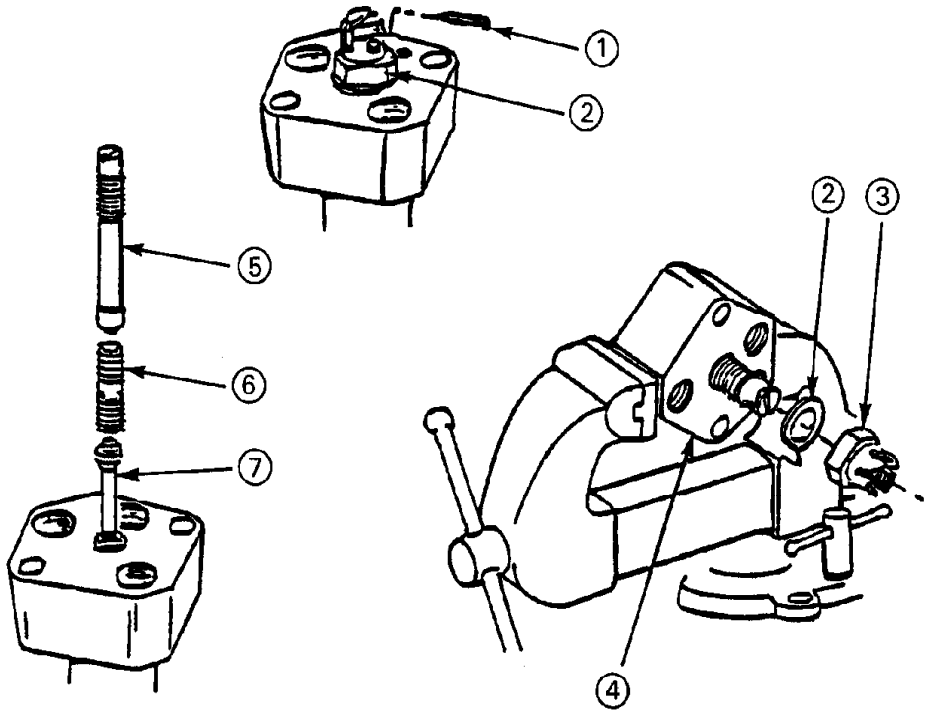

c. Facing page - Procedural steps and supporting graphics are arranged so they are opposite each other when the procedure is opened for use (See also Figure 5.2.15, Facing page format).

Administrative Information Only

Figure 5.2.15. Facing page format.

MH-12MC-DG-03
Page 4 of 14

7.0 Disassembly of Nozzle

7.1 Pull out and discard cotter pin (1).

7.2 Straighten out (bend) tab of lock-washer (2) away from wrench flats of locknut (3).

7.3 Clamp head of nozzle (4) in soft-jaw vise. Unscrew locknut (3). Take off and discard lockwasher (2).

7.4 Remove nozzle (4) from vise; then, unscrew adjusting screw (5).

7.5 Take out spring (6) and pushrod (7).

Put all lose parts (3, 5, 6, 7) into storage bag.

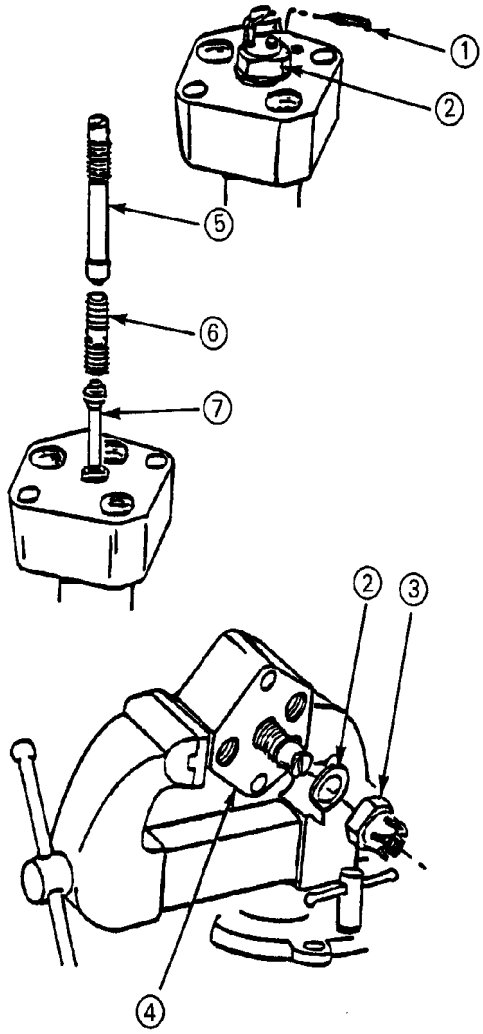

d. Running text with foldout art - Continuous running text is used with the supporting graphics typically presented on a separate foldout page at the end to the procedure (See also Figure 5.2.16, Running text with foldout art format). Note, foldouts should be avoided where possible because they add bulkiness to the procedure and may be more awkward to use and are more easily torn.

Administrative Information Only

Figure 5.2.16. Running text with foldout art format.

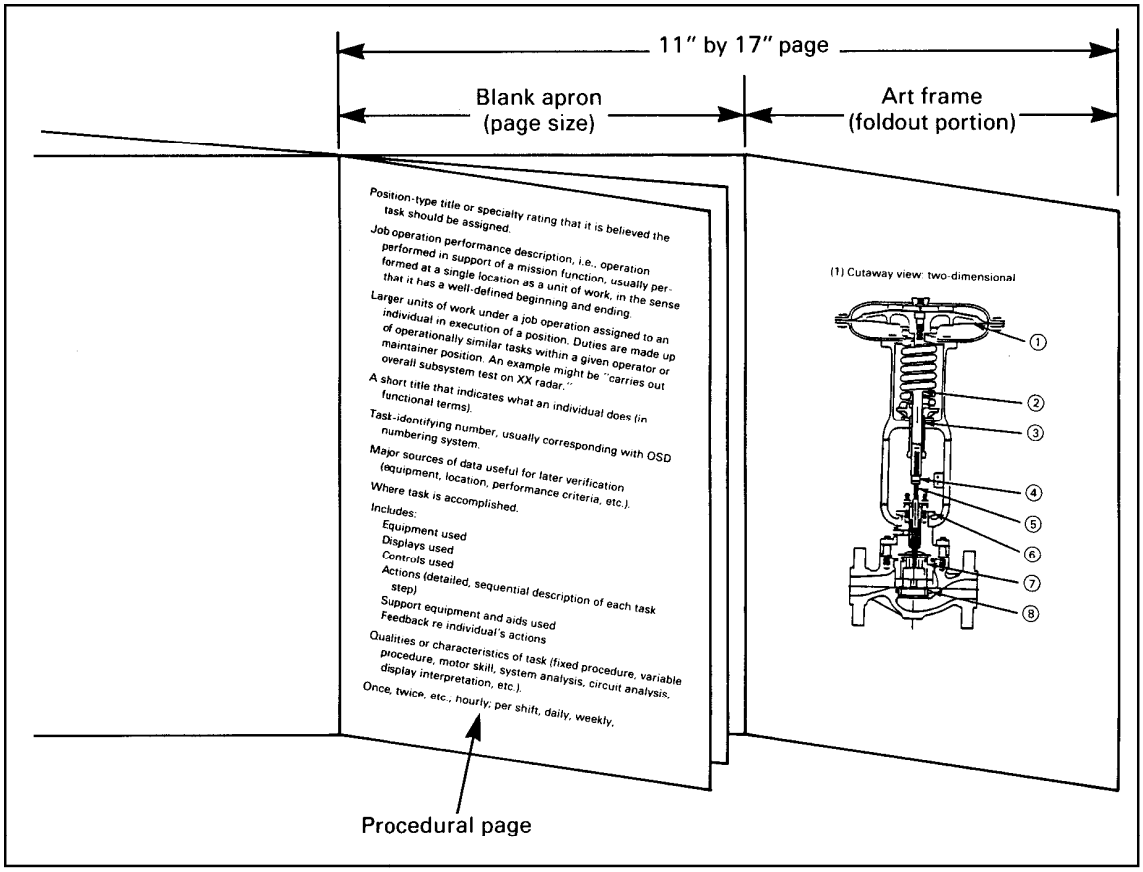

5.2.3 Procedural instructions

5.2.3.1 General guidelines for procedural instructions. The following guidelines should be followed for procedural instructions in vendor technical manuals and procedures:

a. Use step-by-step instructions with no more than three actions per step. For each step, use short sentences of 10 to 14 words with concise and unambiguous language.

b. Use positive verbs rather than negative verbs. For example, "Press red button when buzzer sounds" should be written rather than, "Do not press red button unless buzzer sounds."

c. Make symbols and names in the instructions agree with common usage, equipment labels, and legends.

d. Give the in-tolerance signal characteristic and the acceptable tolerance for each test point.

e. Highlight cautions and warnings and put them in the manual prior to the action that might be hazardous to either personnel or equipment.

5.2.3.2 Procedural steps as actions or commands. Procedural steps should be written as actions or commands using the following general guidelines:

a. Begin with the word or phrase that best describes the action to be taken by the maintainer.

b. Identify the specific equipment hardware item to which the maintainer's behavior is being directed.

c. Use other words as necessary to show location, method, or direction of manipulation. If graphics convey location or directional movement, these words may not be necessary.

An example of a properly written procedure step would be the following:

Unscrew	locknut	from driveshaft.
(Verb)	(Object)	(Location)

5.2.3.3 Verbs. Verbs that best describe the action taken by the maintainer should be chosen; single-syllable verbs should be chosen instead of multi-syllable verbs. Some examples of common verbs and more effective substitutes are:

Common verb	More effective substitute
Remove	Pull out
Utilize	Use
Accomplish	Do
Actuate	Start, turn on

5.2.3.4 Individual task steps. Each action or related group of actions should be presented in an individual task step. This is illustrated below (See Figure 5.2.17, Presenting actions as task steps):

Figure 5.2.17. Presenting actions as task steps.

USE THIS	NOT THIS
Assembling Injector Tapping Tool 1. Replace defective part. 2. Install nut and washer on hand-tap shank. 3. Install rollpin in nut. 4. Check tapping tool for proper operation.	**Assembling Injector Tapping Tool** First, replace the defective part from supply. Install nut and washer on hand-tap shank. Next, place the rollpin in the nut. Upon completion, check the tapping tool for proper operation.

5.2.3.5 Specificity. Procedural instructions should be written in specific terms and required decision-making by the user should be kept to a minimum.

5.2.4 Graphics and illustrations.

Graphics should be used to describe an item or idea more efficiently and effectively; to clarify the text; to aid in identification of parts and special tools; to call attention to details; to supplement information that is difficult to describe by text alone; and to minimize required calculations through display of information.

Administrative Information Only

5.2.4.1 Photographs. Photographs should be used when the technician must:

a. Locate and manipulate small, unfamiliar objects located in a maze of other small, unfamiliar objects.

b. Bring their hands close to hazardous electrical potentials

c. Recognize qualitative deterioration of a part that could not be shown clearly by a shadowed drawing.

5.2.4.1.1 Callouts on photographs. Callouts on photographs such as arrows indicating test points should stand out clearly.

5.2.4.2 Pictorials. Pictorials are line drawings typically developed by tracing photographs of the equipment. Since pictorials depict equipment as it actually appears, the user may more readily identify the equipment. Lines and details on illustrations should be clear and sharp so they can be copied without dropout. Including an object of easily identifiable size such as a hand or a common toll in the pictorial can increase the maintainer's ability to appreciate the size of the equipment or work area.

5.2.4.4 Drawings. Drawings are particularly useful when some part of equipment must be highlighted or magnified. Show in three-dimensional view, or show a component in relation to other parts when the relationship would not be clear in a pictorial or a photograph.
\
5.2.4.4.1 Exploded view drawings. Exploded drawing typical show an assembly that has been separated into component parts. They should be used for parts identification and location, for disassembly and re-assembly procedures, and for removal and installation procedures (See also Figure 5.2.18, Exploded view drawing).

Figure 5.2.18. Exploded view drawing.

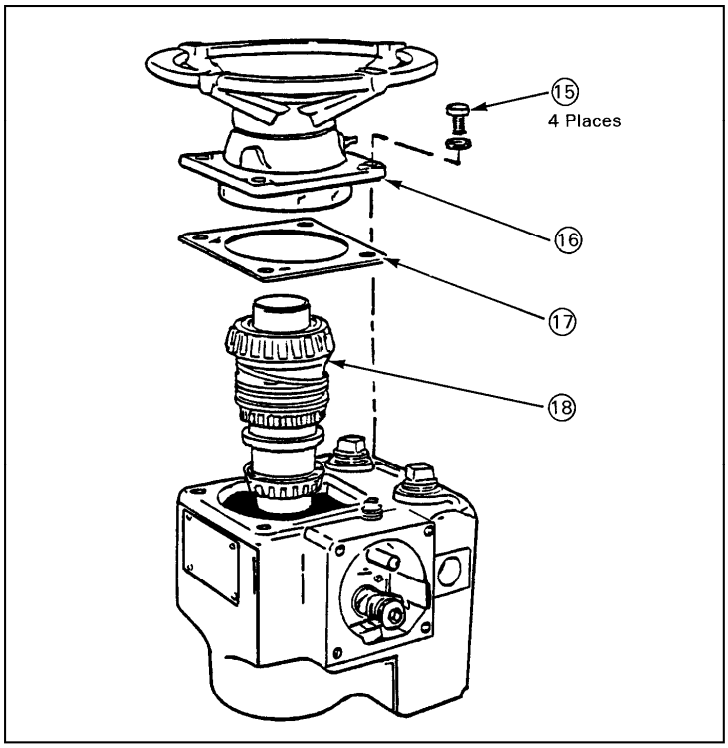

Administrative Information Only

5.2.4.4.2 Cutaway view drawings. Cutaway view drawings show how equipment parts are assembled and should be provided when the technician cannot see the part to be maintained (See also Figure 5.2.19, Cutaway view drawings).

Figure 5.2.19. Cutaway view drawings.

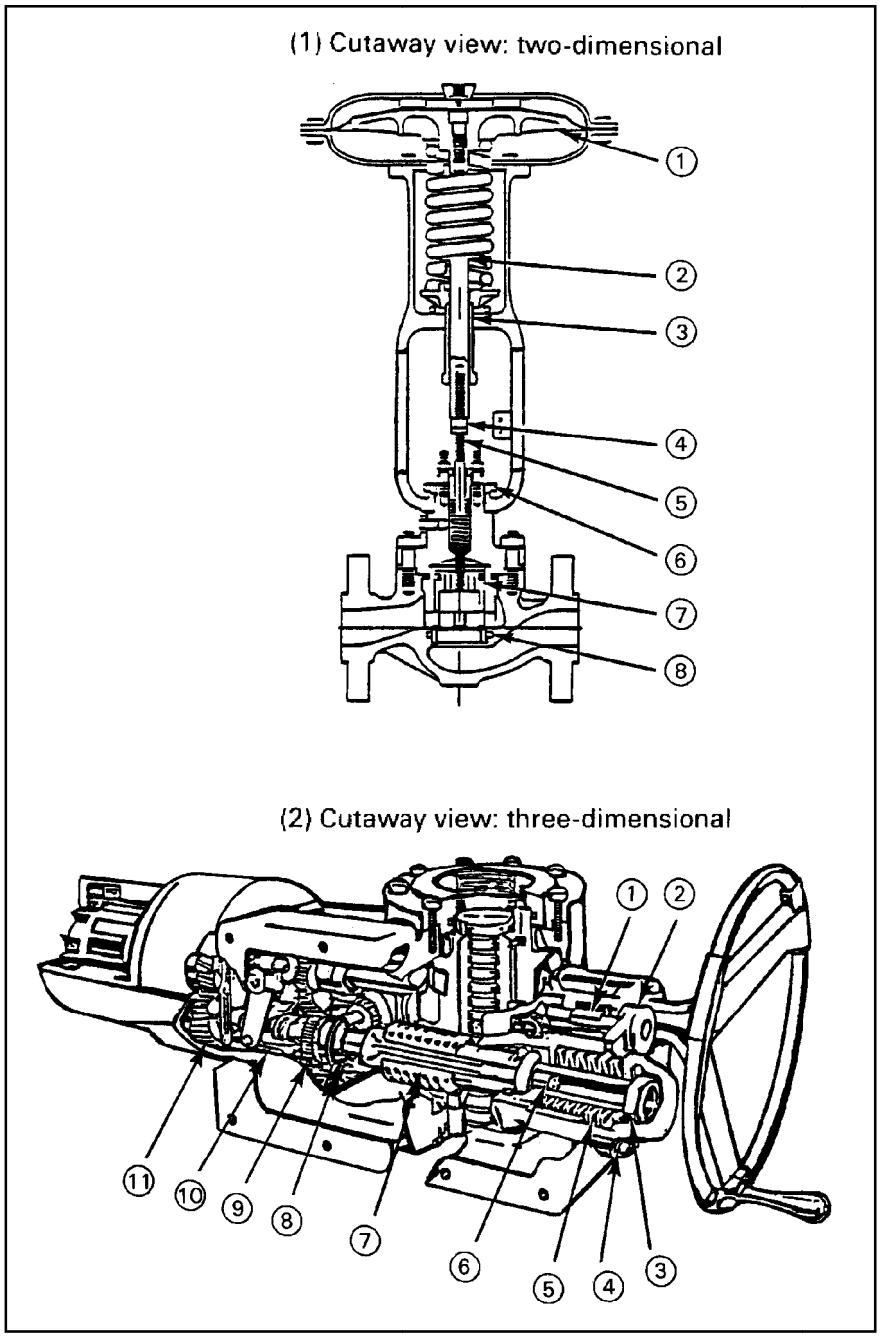

5.2.4.5 Data-flow diagrams. Data-flow diagrams may be used to depict processes and interrelationships. If feasible, components in data-flow diagrams should be shown in the same relative position they occupy

Administrative Information Only

in the equipment. Only electrical characteristics of the signal should be shown in data-flow diagrams. Electrical characteristics of the components should not be shown.

5.2.4.6 Graphs. Graphs may be used to effectively present a visual image of numerical data and to replace or enhance equations.

5.2.4.7 Tables. Tables should be used to aid in making logical decisions for operational check-out, testing, and calibration tasks.

5.2.5 Troubleshooting procedures. Troubleshooting procedures are specialized procedures used for fault isolation. Fault isolation is perhaps the most demanding maintenance operation for a technician to perform because it involves complex diagnostic problems and decision processes. Troubleshooting procedures should (3.3.4.1):

a. Follow a systematic strategy; a troubleshooting method, common to diagnosing electronic equipment failures, is presented below in a summary form.

   (1) Step 1-Visual checks for clues such as smoke, loose connections, or missing or damaged parts.

   (2) Step 2-Operational checks by evaluating readings from meters, gauges, and other indicators. Checklists are typically used for this step.

   (3) Step 3-Intermediate checks to isolate the malfunction to a particular stage, i.e., unit, assembly, or component.

   (4) Step 4-Systematic checks by an ordered inspection of, for example, circuits within a component.

   Decision trees and computer-aided techniques are other effective troubleshooting approaches.

b. When available, use probability data for developing troubleshooting procedures.

c. Use short sentences with concise and unambiguous language.

d. When applicable, provide special diagrams for the technician which help in analyzing symptom patterns by indicating which components affect each system output for each step in an operational or intermediate check.

e. Provide double check lists for an independent observer to check specially critical activities.

Administrative Information Only

INTENTIONALLY BLANK

Administrative Information Only

6.0 DEVELOPING MAINTENANCE PROGRAMS

6.1 Preventive maintenance programs

This section covers aspects of developing preventive maintenance programs. Preventive maintenance refers to scheduled tasks taken prior to functional system or equipment failure (including unacceptable performance degradation) to ensure reliable operation. Effective implementation of preventive maintenance can increase the life of equipment, reduce unscheduled outages and outage time, and reduce the spares inventory required. Preventive maintenance programs should be based on the following considerations

a. Maintenance activities should be concentrated on systems and components where in-service failure would have significant consequences (either safety or economic).

b. For most items, use of hard-time policies where an item must be removed from service at or before a previously specified time is less effective than a good program of equipment monitoring and diagnostics.

c. Management of information is crucial to the overall program.

6.1.2 Steps in developing a preventive maintenance program. The steps in developing a preventive maintenance program are listed below:

a. Establishing a program-planning group with broad organizational participation.

b. Selecting the systems to analyze and identifying functions performed by the components in those systems.

c. Identifying, by analysis of operating history or of equipment design the most likely significant failure modes of the equipment.

d. Identifying the need for a preventive maintenance task to reduce the possibility of a functional failure.

e. Determining whether the preventive maintenance task is justified based on its costs and benefits.

6.1.2.1 Establishing a program planning group.

6.1.2.1.1 Membership. In addition to the maintenance department personnel, maintenance related tasks may be performed by plant engineering, I&C, and electrical maintenance and laboratory groups; consequently, all appropriate plant departments should be represented in preventive maintenance program development.

6.1.2.1.2 General orientation. The program organization should feature a general orientation for all group members on the preventive maintenance activities being performed by each of the plant departments. A consensus should be achieved on what constitutes preventive maintenance so that all members are aware of the present group.

6.1.2.1.3 Objectives. As an initial activity, the group should reach agreement on program objectives.

Administrative Information Only

6.1.2.1.4 List of preventative maintenance tasks. The group should establish a list of currently performed preventive maintenance tasks.

6.1.2.2 Selecting systems and component functions within those systems.

6.1.2.2.1 Define systems. As a first step in this phase, the system boundaries should be established and agreed on by all group members. Plant components should then be partitioned by systems.

6.1.2.2.2 Critical systems list. Prioritize each of the systems developed in step 6.1.2.2.1. Define systems, based on the safety and economic impact of system failure. The systems on the critical systems list are those for which failure has relatively high safety and/or economic impact.

6.1.2.2.3 Component function identification. For systems on the critical systems list, functions provided by equipment/components comprising the system should next be identified.

6.1.2.2.4 Critical equipment/components list. The equipment/components for which failure might significantly compromise critical system function should be identified.

6.1.2.3 Identifying significant failure modes of equipment. Using failure modes effects analysis incorporating the experience of plant staff members and results from a review of equipment history, the group should identify the failure modes most likely to result in the loss of critical equipment function.

6.1.2.4 Identify need for preventive maintenance task. The group should use a strategy such as the decision logic tree shown below to identify the need for preventive maintenance tasks (See Figure 6.1.1, Decision logic tree. Note that decision nodes are indicated by an arrow and a number and that decision points 4, 6, 7, and 8 have preventive maintenance as a possible outcome).

6.1.2.5 Cost benefits analysis. The groups should determine whether the preventive maintenance task is justified on the basis of an economic trade-off study. An economic trade-off study should involve the following steps

a. Estimate the incremental effect of preventive maintenance on the failure rate of the item for several different maintenance intervals.

b. Translate the reduced failure rate into cost reductions. Cost reductions include both the cost of repair and indirect cost savings due to increased equipment availability and/or increased safety.

c. Estimate the cost of performing preventive maintenance for each of the maintenance intervals considered.

d. Determine the maintenance interval, if one exists, at which the cost-benefit ratio is most favorable.

6.1.3 Preventive maintenance not justified. Where preventive maintenance is not justified or where it seems advisable to supplement it with other ways of increasing system or equipment reliability, other approaches such as redesign, use of more reliable components or equipment, use of protective devices to minimize the effects of failure (See also Section 2.5.3, Protective devices), or use of monitoring programs to identify failures. (See section 6.2, Monitoring Programs)

Administrative Information Only

6.1.4 Types of preventive maintenance tasks

6.1.4.1 Scheduled restoration tasks. Scheduled restoration tasks entail taking a maintenance action (for example, overhauling an assembly) to restore the item to it's initial low failure probability rate prior to the item age at which failure becomes substantially more likely; restoration being done regardless of the items condition at that time. Scheduled restoration may be used if:

a. There is an identifiable age at which the item shows a rapid increase in likelihood of failure

b. Most of the items survive to that age (all of the items if failure has safety or environmental consequences).

c. Restoration actually restores the item to a prolonged, relatively low failure rate.

Administrative Information Only

Figure 6.1.1 Decision logic tree.

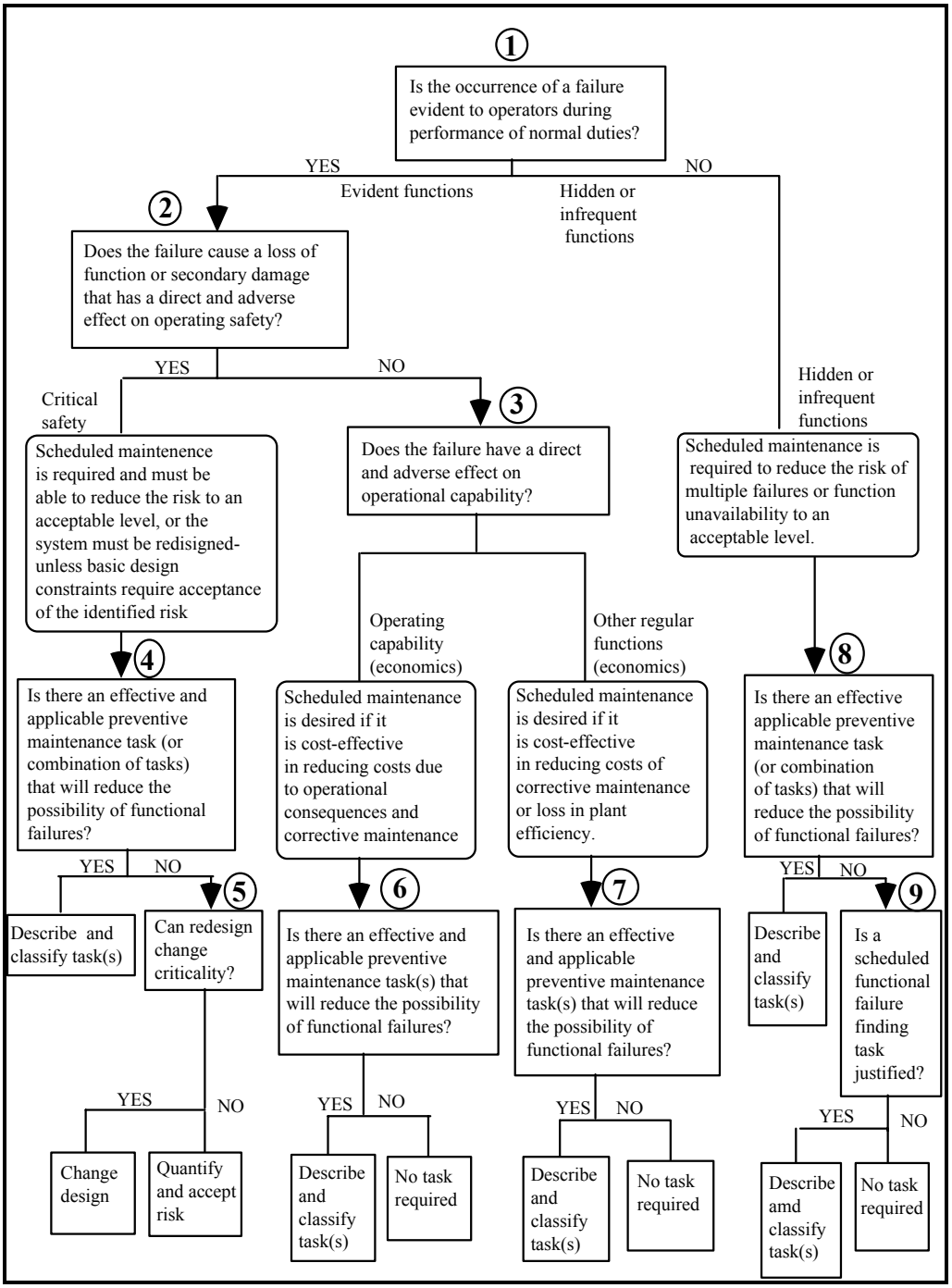

6.1.4.2 Scheduled discard tasks. Scheduled discard tasks entail discarding and replacing an item before a specified age at which failure becomes substantially more likely, regardless of the items condition at time of replacement. Scheduled discard tasks may be used if:

a. There is an identifiable age at which the item shows a rapid increase in likelihood of failure.

Administrative Information Only

b. Most of the items survive to that age (all of the items if the failure has safety or environmental consequences).

6.1.4.3 Scheduled on-condition tasks. Scheduled on-condition tasks refer to maintenance actions undertaken when a scheduled inspection indicates that potential failure is about to occur or is in the process of occurring (for example, replacing gears when particles in the gearbox oil show that gear failure is imminent). Scheduled on-condition tasks may be used if:

a. It is possible to define a clear, observable physical condition that indicated potential failure.

b. The time interval between which the item can first be observed as being failure prone and occurrence of the actual failure is fairly consistent.

c. It is practical to monitor the item at intervals which are less than this consistent time interval.

d. This consistent time interval is long enough to avoid the consequences of functional failure.

6.2 Monitoring programs to detect functional failure (including unacceptable performance degradation).

Monitoring programs are provided for early detection of component and equipment functional failure (including unacceptable performance degradation). Scheduled monitoring programs entail checking items for which functional failure is not apparent at regular intervals to determine whether failure has occurred. Such failure finding programs may be used if:

a. A functional failure will not become evident to the operating crew under normal circumstances.

b. The failure is one for which a suitable preventive task cannot be found.

c. It is practical to do the task at the required frequency.

d. The task does not increase the risk of failure of the item or other associated items.

6.2.1 Selection of monitoring methods. The selections of monitoring methods should be based on cost-effectiveness (including safety factors) considerations.

6.2.2 Failure modes effects analysis. Analysis of potential failure modes and their effects may be used to support the identification of potential means of failure detection. The failure mode analysis links an equipment function and the failure mode(s) that may result in the loss of this function. For types of equipment and systems with operating histories, reliability and availability data can aid in identifying failure modes having high cost impacts (See also Table 6.2.1, Sample portion of Failure modes effects analysis).

Administrative Information Only

Table 6.2.1. Sample portion of component failure modes effects analysis.

Component: Boiler Feed Pump		
Function	**Failure mode**	**Effect**
1. Provide flow	A. Journal bearing failure B. Cavitation damage C. Impeller breakage D. Shaft breakage E. Thrust bearing failure F. Impeller wear ring failure	Function lost Function degraded Function lost Function lost Function lost Function degraded
2. Provide feedwater pressure boundary	A. Seal leakage B. Weld failure C. Corrosion/erosion	Function degraded Function degraded Function degraded

6.2.2.1 Candidate monitoring approaches. Failure modes effects analysis can be extended to catalogue candidate monitoring approaches (See also Table 6.2.2, Classification of functional failures for selection of monitoring approaches).

Table 6.2.2. Example of classification of functional failures for selection of monitoring approaches.

Component: Boiler Feed Pump			
Failure mode	**Criticality**	**Applicable monitoring approaches**	**Type of activity***
Journal bearing failure	Economic/generation	Vibration analysis Inspection (tear down) Thermographics	V I V
Cavitation	Economic/generation	Inspection (tear down) Acoustics	I V
Impeller breakage	Economic/generation	Flow/discharge trending Inspection (tear down) Acoustics Efficiency	V I V V
Seal leakage	Economic/repair	Visual inspection	A/S

* A/S - Adjustment and servicing, V - Verification, I - Inspection

Administrative Information Only

6.2.3 Considerations for selecting monitoring approach. Considerations in selecting a monitoring approach should include the following:

a. Likelihood of timely detection - As an example, the use of broad-band vibration monitoring to detect bearing failure may not be able to provide timely warning, whereas spectral analysis of bearing temperature monitors can give earlier warning for some failure modes.

b. Signal-to-noise ratio - The effects of condition noise and the likelihood of false alarms should be considered. Signal-to-noise ratios should be high enough to keep false alarm rate and rate of detection failures low. Computers enhancement may be used to increase signal-to-noise ratio.

6.2.3.1 Zonal inspections. Equipment and system design should provide features that enhance condition monitoring during walkaround inspections.

6.2 4 Monitoring **programs not justified.** Where scheduled monitoring programs for failure are not justified and preventive maintenance is not applicable or where it seems advisable to supplement such monitoring programs with other ways of increasing system or equipment reliability, other approaches such as redesign, use of more reliable components or equipment, and use of protective devices to minimize the effects of failure (See also Section 2.5.3, Protective devices), should be considered.

6.3 Servicing and adjustment

Servicing and adjustment refers to routine, scheduled maintenance activities that require little or no downtime and are intended to maintain operational capability. Examples of servicing and adjustment tasks are:

a. Clean and inspect filters and strainers.

b. Clean and inspect motor controllers.

c. Calibrate pressure gauge.

d. Adjust valve or pump packing.

6.3.1 Use of servicing and adjusting approach. The advantages and disadvantages of using the servicing and adjusting approach should be systematically considered before deciding whether a function should be covered by a servicing and adjusting task or by another approach. See Table 6.3.1, Advantages and disadvantages of using servicing and adjusting approaches.

Administrative Information Only

Table 6.3.1. Advantages and disadvantages of using servicing and adjusting approaches.

Advantages	Problems
Servicing	
• A means is provided for replenishing the used items such as oil • Protection is provided against wearout failures because of factors such as friction.	• Service points must be accessible and thus constraints are placed on structural design. • Fuels may be hazardous and require special provisions and handling methods. Because of such hazards, fueling may have to be done outdoors regardless of climatic conditions. • Since some servicing items are in themselves contaminants, great care must be exercised in preventing spills and accomplishing clean up.
Adjusting	
• Costly and sometimes time consuming replacement of elements may be reduced by the returning of out-of-tolerance elements to within tolerance limits. • An indication of system degradation can be obtained by having skilled personnel observe display response to control manipulation. • The tolerance limits for some components can be broadened.	• The process is often slow and tedious. • Errors of display reading and over-adjustment may result in system degradation. • Manipulation by an inexperienced maintainer may result in equipment malfunctions and system degradation.

6.3.1.1 Use and placement of servicing points. Requirements for servicing and adjusting should be minimized by using maintenance-free components such as sealed bearings and highly reliable components. The following requirements should be considered in determining use and placement of service points

a. Requirements for portable test and auxiliary equipment (built-in indicators that reduce the need for portable test equipment)

b. Requirements for supporting technical information, procedures, and training.

c. Requirements for access, work space, and work clearance, including platforms to support the portable equipment.

d. Requirements for facility support, such as electric power and service air needed for the servicing tasks.

Administrative Information Only

For additional information concerning service point design, see Sections 2.4 and 2.8, Equipment accessibility and Test and service point design, of this document.

6.4 Maintenance information management systems

Maintenance information management system refers to a system, typically at least in part computer based, for work scheduling, fault detection, status of consumables, displaying and analyzing system status indicators related to maintenance, and other aspects of coordinating maintenance operations and systems used to perform these activities. Systems designed to integrate/display and control equipment and plant systems are not covered here except as they touch on aspects related to maintenance.

6.4.1 Design requirements for maintenance information management systems. Design requirements for maintenance information management systems are provided below.

a. Maintenance information management systems should provide the following information:

   (1) Status indications to/and from all subsystems for the purpose of system maintenance and trouble-shooting procedures.

   (2) Where applicable, trend data acquisition and analysis to show the progression of subsystem performance over time.

   (3) Status of consumable necessary for system operation and maintenance.

   (4) Fault detection/isolation

   (5) Scheduled maintenance data

   (6) Repair/replacement information

   (7) Replacement unit maintenance history and maintenance checklists

b. Recording and Retrieval - The system will provide for the recording and retrieving of maintenance information, where necessary this capability should be provided in real or in near real time.

c. Fail Operational Systems - All systems that incorporate an automated fail-operational capability should be designed to provide system operator notification and information system status indication of malfunctions until the faults have been corrected.

d. Spares/Replacement unit inventory - The automated information management system should contain an inventory to identify ID numbers, quantities of, and locations of replacement units. This management system should also contain a “Characteristics” matrix for each type of replacement unit including information such as:

   (1) Replacement unit ID number

   (2) Whether unit contains built in test-equipment

   (3) Hazardous system factors

Administrative Information Only

(4) Critical system status indicating need for replacement

(5) Availability, location, and any special procedures needed to obtain unit

(6) Shelf-life limits

(7) Serial number traceable to manufacturer

(8) Date of manufacture

(9) Storage constraints

(10) Procedures, tools, and test equipment required for successful installation and testing (added by LP).

6.5 Software and program maintenance

Software or program maintenance is defined as the process of modifying existing operational software to fix errors, to accommodate different operational environments such as new hardware or software platforms, to add new functions and/or improve program efficiency, or to anticipate future problems by making software easier to maintain or modify. It covers system life-cycle phases from change requirements analysis to implementation and documentation of program modification.

6.5.1 Design for maintainability. Software supporting maintenance information systems and other software developed to meet DOE needs should be designed for maintainability in accord with the guidelines presented below.

6.5.1.1 Transition plan. Prior to a software developer/vendor turning over a software system to the software maintenance or support organization, an adequate transition plan should be in place which specifies the group responsible for program maintenance and what their duties will be in this regard. There should be a written maintenance methodology that formally specifies the process of change management

6.5.1.1.1 Training for software maintainers. Prior to and during the transition phase training on the software system should be provided to software maintenance or support personnel concerning the structure and organization of the system. The maintenance organization should receive training before the system is turned over thorough spending time with the developer and performing functions such as tracking problems, configuration management, testing and integration, and fixing code.

6.5.1.2 Documentation. A system produced for or by DOE should be provided with adequate documentation to allow system maintainers to adequately understand the system for future modification. This documentation should be up-to-date and should include a model of the system, a software listing, test /validation documentation, system specification, etc.
.
6.5.1.2.1 Updating documentation. Whenever the software system is changed the documentation including the system model and software listing should be updated accordingly. In addition to updating system documentation a change history should be maintained to provide information on changes made so that maintainers will be aware of past problems encountered and the reason for changes that were made.

Administrative Information Only

6.5.1.3 Analysis of likely change. The initial system analysis undertaken for system development should identify areas where control and transaction requirements are likely to change in the future; the initial system analysis should provide or at least suggest a means to institute enhancements to respond to these changes at a later date. Change prone modules which will have significant maintenance activity applied to them over the life cycle of the software should be identified where possible and overhauled to reduce the need for later maintenance.

6.5.1.4 Analysis of problems and possible solutions. Changes to an existing software program should not be developed or instituted without prior analysis. This analysis should be used to clearly specify the problem (including the exact conditions in which it occurs), the enhancement, or the adaptation being considered, what part(s) of the software have to be modified to meet the need or to solve the problem, and how these modifications should be made. It will also be used to determine whether it is better to develop a new system or module or to make changes in the existing system or module. The results of the requirements analysis should be documented.

6.5.1.5 Testing modified software. After software has been modified, affected modules should be identified and individually tested to assure they meet the requirements for which they were developed. Finally, the individual modules should be combined and tested as a whole. Testing should include test cases which assure that the old desired capabilities are still satisfactorily met as well as added cases to assess whether new requirements are being met.

6.5.1.6 Notifying users of design changes. When changes are made to software system design, including changes in related job aids, the users should be informed of those changes.

6.5.1.7 Training for users. Where necessary provisions should be made for training users on new system modifications.

6.5.1.8 Protection from design change. User interface design should be protected from any changes that might impair system function. (Section 6.5, Design change, Smith and Mosier).

6.5.1.8.1 Consistency. Changes in the computer interface, data entry and display should be consistent with the original system (for instance, in terms or mode of interaction with the computer, terminology used, coding employed, and messages and prompts). The original interface design need not be frozen; if features are added, the original interface design may be changed so that it is consistent with the “add-ons” or new modifications.

6.5.1.9 Revising related job-aids. Related job aids such as help screens, users manuals, and procedures use of the revised software, should be kept current with changes in the software and hardware system.

6.6 Maintainability design as a part of system development

Maintainability design refers to the preferred phasing or sequencing of maintainability design activities during system development. Note that only basic principles for developing and implementing a design plan and schedule for maintainability are presented in these guidelines. No attempt is made to detail characteristics of a design program for maintainability.

Administrative Information Only

6.6.1 General guidelines

6.6.1.1 Studying operational equipment. Operational equipment, resembling the type being designed, should be studied by the design team. Particular attention should be paid to maintenance features of the equipment and to correct those features that are lacking in the equipment.

6.6.1.2 Reviewing entire system. The entire system (within which the equipment is to be installed) should be reviewed to determine information such as where the equipment will be installed, access opening measurements, etc.

6.6.1.2.1 Use of aids to show maintenance/design sequences and relations. Flow diagrams, event trees, state diagrams, schedule charts, or other visual displays should be used to show maintenance or design sequences and relations.

6.6.1.3 Use of existing test equipment and tools. Test equipment and tools already in use on related equipment that might be adapted to the equipment being designed should be determined.

6.6.1.4 Determining personnel requirements for maintenance. Maintenance technician availability, required skills and level of proficiency should be determined.

6.6.1.5 Storage and work facilities. Existing storage and work facilities, if any, should be determined.

6.6.1.6 Maintenance information and aids. A determination should be made of the type and quantity of maintenance information (diagrams, manuals, procedures and other job aids, etc.) that will be required to maintain the equipment, how much of the information is available, and how much information must be developed.

6.6.1.7 Supply facilities. Supply facilities should be determined which are available to provide spare parts for the equipment.

6.6.1.8 Design for accommodation over plant life. In designing a plant, allowances should be made for changes in maintenance needs during different phases of plant construction and changes in needs due to plant aging and increasing radiation levels.

6.6.2 Development of design for system maintainability.

6.6.2.1 Tasks or phases in developing system maintainability design. An overall plan for maintainability should be developed to include the following tasks to insure the design for maintainability will proceed in an orderly and effective manner

a. Project definition phase - Proposals for new systems should include quantitative maintainability objectives as an inherent portion of the performance objectives. A maintainability program and appropriate documentation, including the maintainability objectives, and a plan for achieving and evaluating objectives should be included.

b. Development program phase - The development program phase should include or provide for the following essential elements:

Administrative Information Only

(1) Program plan - Contains maintainability objectives, plans, goals, and milestones for accomplishment and evaluation which can be demonstrated on a time basis. This plan can also serve as a guide for all design, production, and product assurance engineers.

(2) Quantitative modes - Provides goals for maintainability, availability, etc. to serve as a standard for demonstrating the design achieved. This model can also be used in determining the maintainability status and effectiveness of the system during all stages of design, development, and testing.

(3) Specification review - Emphasizes the importance of maintainability as part of the overall design program. As an initial effort of the program, a complete and thorough study of maintainability and other related product assurance specifications should be made.

(4) Prediction and analysis - Provides preliminary maintainability predictions based on data supplied through integrated test program.

(5) Training program - Orients to maintainability all engineering personnel participating in equipment or system development.

(6) Human factors engineering - Reviews equipment design concepts for logic, display control configurations, and operations emphasizing system maintainability.

(7) Change control - Procedure assures that design changes required for and affecting maintainability are carefully reviewed.

(8) Scheduled design reviews - insures that design changes required for and affecting maintainability are carefully reviewed.

(9) Methods for considering design tradeoffs - Considers in early development phase, the designs which, while conforming to maintainability specifications, do not always meet other specified requirements; i.e., operational requirements, reliability, economic limitations, and performance requirements.

(10) Vendors indoctrination program - Provides subcontractors with maintainability guidelines and specifications.

(11) Maintainability demonstration - Conducted to obtain maintainability data that cannot be evaluated by analytical methods, or as required to verify that maintainability requirements have been met by equipment vendor or contractor.

(12) Scheduled evaluation and improvement - Evaluates data feedback from demonstrations, tests, and field areas for supporting design improvement recommendations and for verification of maintainability predictions.

c. Production phase - During this phase, the maintainability requirements and objectives must be consistent with those established during design and development, i.e., with the maintenance support plan. Close surveillance should be provided to assure that quality assurance requirements and maintainability specifications are met. This phase considers:

Administrative Information Only

(1) Quality control - Maintains high quality in workmanship and manufacturing standards with respect to maintainability. Poor quality control practices must be isolated and corrective action initiated to preclude maintainability problems in the field.

(2) Modification and change control - Establishes coordination procedures between design and manufacturing activities to insure that changes or modifications to equipment design are agreed upon before they are initiated. In all cases the designer must concur with the changes.

d. Operational phase - The final verification of ease and safety of maintainability is accomplished during this period. This phase includes:

(1) Initial development stage - Based upon evaluation of data accumulated relative to design tests, engineering costs, user tests, system demonstrations, transportation, storage assembly, emplacement and check-out. Data should be analyzed and recommendations made for product improvement for future equipment.

(2) Field operating stage - Despite the best efforts of designers to incorporate ease and safety of maintainability into the facility and equipment, unforeseen problems may be expected to arise. Consequently the DOE facility should have a program for systematically collecting and reviewing maintainability data and data concerning problems experienced on a scheduled, periodic basis as well as at other times as the need arises. Active maintenance data should be analyzed from all equipment sites and used to validate predicted maintainability figures. Unsatisfactory Equipment Reports (UER), Equipment Improvement Reports (EIR), or equivalent methods, should be utilized.

6.6.2.2 Requirements for implementation of design program for maintainability. To successfully implement a design program for maintainability, the maintainability plan should.

a. Be sufficiently flexible to permit revision and updating at any point in the program.

b. Include the various tasks and milestones, and approximate times required to accomplish each. (This is the design schedule.)

c. Show each key event, and the coordinated sequence of occurrences, and the interrelationship of events. (This may be shown within the design schedule.)

d. Provide valuable impetus for determining project costs and the most economical allocation of personnel.

e. Provide a mechanism for developing and revising related materials such as maintenance procedures and training programs

f. Provides adequate mechanisms for design verification of maintainability.

g. Provide a mechanism operational feedback as outlined above

6.6.3 Design Verification of maintainability.

Design verification is an integral process in steps a through d. It entails use of a set of procedures to assure that the maintainability objectives, plans, and goals are actually being achieved. Design

Administrative Information Only

verification refers to those procedures that are used to assure that ease and safety criteria for maintainability of facilities, systems, subsystems and equipment are actually being met.

6.6.3.1 Worst case reference framework. In attempting to verify the adequacy of man-machine interfaces, the system should be tailored to match the abilities and limitations of the **least** skilled personnel who will be assigned to maintain the equipment under the most realistic worst-case scenario. Maintenance tasks that may appear reasonable under normal work circumstances or environments may appear difficult and/or error-prone under less optimal conditions. Performance-degrading conditions that may be encountered at DOE nuclear facilities include

a. High thermal environments that may be coupled with the use of anti-contamination protective gear.

b. Fatigue and stress associated with excessive overtime during extended outages

c. Use of outside personnel who may not be as skilled or motivated as in-house personnel.

d. High noise environments that impede effective communication

6.6.3.2 Techniques for design verification. The techniques outlined below may be used to check the ease and safety of maintainability for planed or extant equipment, systems, and facilities.

6.6.3.2.1 Use of overlays. Overlay transparencies of workers in different postures as well as equipment such as forklift trucks at an appropriate scale may be prepared for superimposition on drawings of frontal or side views of different equipment and workstation arrangements. The fifth and ninety-fifth percentile user should be used. Where applicable, these overlays should include the worker wearing protective gear (See Figure 6.6.1, Use of prone position overlay to evaluate required clearance, for example of overlays).

Administrative Information Only

Figure 6.6.1. Use of prone position overlay to evaluate required clearance.

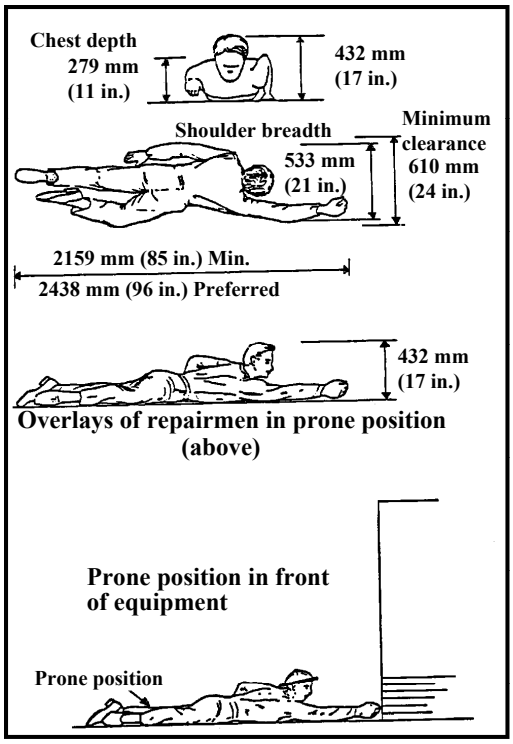

6.6.3.2.2 Use of Articulated templates or mannequins. Articulated plastic figures of fifth and ninety-fifth percentile workers created to scale may be used in addition to or in place of overlays to provide a variety of anticipated work positions. They may be designed to reflect protective gear encumbrances.

6.6.3.2.3 Use of computer aided design. Computer based anthropometric aids in which the designer calls up the design drawing and view of interest and then has the computer superimpose the maintenance person and/or equipment in the position of interest are receiving increasing use and should be considered. The human figure can be matched in scale and varied in size from the fifth to the ninety-fifth percentile values. Similarly, where plant configuration models are developed, they can be used to model equipment access, access space required to mount test equipment, laydown areas for equipment during dismantling and removal, and rigging operations for large components including all equipment and scaffolding required. Spatial conflicts, personnel access, and radiation levels can be identified and evaluated.

6.6.3.2.4 Scale models. Three dimensional scale models may serve as a valuable design tool and review aid in early design stages. For human factors evaluation purposes, models of maintenance personnel are created to the same scale as plant design models. Personnel models should be created to cover both ends of the anthropometric range with and without special protective gear encumbrances. Note that models may serve functions that transcend original design review needs. They may be used to create drawings in two dimensions as well as for training aids for orientation of plant personnel.

6.6.3.2.5 Full scale mock-ups. As the design concept for the system, equipment, or facility component advances it may be necessary to develop full scale mockups because it may be relatively difficult to envision the full range of task elements, work motions, and work postures from an examination of relatively small-scale models of men and equipment or two-dimensional figures. Simple inexpensive cardboard or Styrofoam mockups can be used to resolve many design issues. When the mockup must

Administrative Information Only

support the weight of personnel, a sturdy wooden or metal framework may be needed. For design review purposes, the materials selected should allow for successive design changes until the best approach is determined. When using mockups for design verification, it is important to select maintenance personnel who reflect the anticipated anthropometric range. Fifth and ninety-fifth percentile personnel should participate in mockup evaluation exercises. Mockups can serve to evaluate factors such as

a. Clearances for tool use

b. Clearances required for maintenance crew interactions

c. Adequacy of design for personnel encumbered with protective clothing and gear

d. Laydown space

e. Pull space

f. Procedures, parts, test equipment/laydown

g. Visibility and readability of labeling

h. Reach factors

i. Work platforms

j. Handling features

k. Biomechanical load stresses

l. Health physics protection factors

6..6.3.2.6 Simulation. Where the real operational environment is important such as ones that may have high temperature and humidity, unreliable communication, high noise, radiation concerns, inadequate illumination, etc. a simulated operational environment may be necessary. Where the normal system response to maintainer actions is required then a simulator rather than a mockup is needed. The degree of simulator fidelity required depends on what is being evaluated. Note that "simulation" may vary from use of a mock-up in a quasi-operational environment to use of a high fidelity simulator.

6.6.3.2.7 Laboratory and field human factors research. When an answer to a critical question arises a carefully designed applied research may prove the most expeditious and cost-effective route to follow. Research can be conducted in the laboratory or in the plant as appropriate, depending on the nature of the research question and the stage of facility development. For example, in selecting an effective communication system for a high-noise environment different configurations of communication systems may be tested in simulated or real conditions.

6.6.3.2.8 Maintainability demonstrations. Where the facility, system, subsystem or equipment, is being supplied by a contractor, the contractor may be required to demonstrate the maintainability of the system being produced in a highly formal and structured manner. Maintenance demonstrations should be conducted as part of a maintainability test plan that is prepared and submitted as part of the contractors or vendors proposal. The demonstration is to assure the DOE client that stipulated maintainability design criteria have been met. The demonstration should be conducted in an environment that simulates, as

Administrative Information Only

closely as practical, the actual maintenance environment planned for the equipment or system under consideration. This environment should be representative of the working conditions, tools, support equipment, facilities, and technical manuals that would be required during actual maintenance activities. To conduct effective maintainability demonstrations, a test plan that includes the following elements must be developed and implemented:

a. Definitive statement of maintainability requirements or evaluation criteria

b. Facility requirements for conduction a realistic test of the system being evaluated

c. Roles of test team personnel, client representatives, and other participating agencies

d. Description of support equipment, tools, test equipment, technical manuals and procedures, spares and consumables, safety equipment, and calibration equipment.

e. Identification of maintenance tasks to be demonstrated

f. Organization and training of test team personnel

g. Training of maintenance personnel in conducting the maintenance tasks to be demonstrated

h. Schedule of tests and data acquisition methods and measurements

i. Demonstration report with recommendations for correcting deviations from established maintainability requirements

Note that comparable steps to a maintainability demonstration should be undertaken for an in-house project and are indicated in items a through d.

6.6.3.2.9 Surveys and checklists. As the facility or system is being developed special surveys and checklists may used to assess whether items related to maintainability such as illumination, noise, communications, safety protection equipment, labeling and coding, hoisting and lifting provisions and other topics of concern meet human factors design criteria. As human engineering problems surface, mechanisms should be provided for documenting, tracking, and resolving such problems. Such surveys should also be used when the plant, system, or equipment is in operation to assure continued conformance to human factors guidelines and standards and to identify problems. User surveys may be undertaken to tap the experience and insight of experienced maintenance personnel with existing systems or with proposed systems. In addition to actual maintenance personnel it may be appropriate to survey trainers, health physics technicians, quality specialists, and others who have knowledge of maintenance activities and potential problem areas. Mechanisms which can be employed to gather user experience include:

a. Informal interviews - Periodic contacts and discussions can be held with maintenance personnel to determine current problem areas or to identify probable future problem areas. This approach produces less reliable data that the structured interview approach

b. Structured interviews - A pre-planned series of queries can be used to determine problem areas. These questions are put to maintenance personnel in a face-to-face interview where an experienced interviewer can explore casual factors associated with maintenance difficulties. The structured interview should be followed by a plant tour to examine first-hand the facilities and equipment sites that are troublesome.

Administrative Information Only

c. Walkthroughs - Maintenance personnel can be asked to provide a comprehensive walk through or tour of the plant, equipment or system and describe maintenance problems during the walk through [or examination of the relevant systems]. The walk through will stimulate memories of prior difficulties that maintenance personnel may not recall during interviews. These walkthroughs should be conducted with relevant maintenance specialists such as electrical, mechanical, and I&C to obtain their unique perspectives.

d. Questionnaires - A formal survey questionnaire can be developed and distributed to maintenance personnel. Using the questionnaire approach, larger sample of personnel can be reached for a given time expenditure. However, there responses may be less detailed than those obtained from a structured interview. The questionnaire may be followed with an abbreviated interview to explore problems noted.

6.6.3.2.10 Acceptance tests. As a condition of acceptance the DOE client should ensure that equipment, subsystems and systems are maintainable to the degree specified in contracts and subcontracts with vendors. Acceptance testing should include reviews of facilities, systems, subsystems and equipment for conformance with maintainability design criteria stipulated at the outset of the plant development process. At this stage, a check should be made to determine whether deficiencies found earlier in maintainability demonstrations and other review methods have been satisfactorily resolved. Final acceptance of vendor-supplied equipment systems and facilities should be deferred until all man-machine interface problems relating to maintainability are corrected.

Administrative Information Only

INTENTIONALLY BLANK

Administrative Information Only

GLOSSARY

Accesses.
Accesses are places designed to allow the maintainer to perform maintenance actions on equipment or components including entrance doors, apertures, inspection windows, and lubrication, pneumatic, and hydraulic servicing points.

Accessibility.
Accessibility refers to the relative ease with which an assembly or component can be reached for repair, replacement, or servicing. Accessibility guidelines for Americans with disabilities are currently being developed to clarify workplace accessibility requirements for government contractors.

Accessible.
Except where stated to the contrary in this document or where specific design values are given, an item is considered accessible only when it can be operated, manipulated, removed or replaced by the suitably clothed and equipped user with applicable 5th and 95th percentile body dimensions and if the steps required to reach the item are few or simple. Applicable body dimensions are those dimensions which are design-critical to the operation, manipulation, removal or replacement task. (For example, an adjustment control behind an aperture should be located sufficiently close to the aperture to enable a suitably clothed and equipped user with a 5th percentile female depth of reach to grasp and manipulate the adjustment control, while the opening should be sufficiently large to enable passage of similarly clothed 95th percentile male hand and arm dimensions.)

Cables.
Cables refer to a number of wire lines bound together within a single, permanent sheath.

Collating test equipment.
Collating test equipment presents the results of two or more checks as a single display.

Configuring.
Configuring refers to the particular method used to systematically package units or components.

Connector
A connector is any fixture designed and intended to join or connect lines or cables.

Discard task.
Discard tasks are maintenance tasks consisting of discarding and replacing an item before a specified age at which failure becomes substantially more likely.

Equipment failure.
An equipment failure is the cessation of the equipment's ability to meet the minimum performance requirements of the equipment specifications. Further, equipment failure implies that the minimum specified performance cannot be restored through permissible readjustment of operator controls.

Head, external grip.
Head on an item which must be gripped, especially for turning such as a bolt or screw, which is shaped to aid gripping by a tool such as a hexagonal shaped bolt head.

Administrative Information Only

Head, internal grip
Head on an item which must be gripped, usually for turning such as a bolt or screw, which has a feature within the head that allows gripping such as a slot or a hollowed area shaped to fit an Allen wrench.

Laydown area.
A cleared area or space designed for setting down large equipment needing maintenance work; these areas usually are supplied with auxiliary supports or services such as adequate lighting, drains, service air, power outlets, and overhead lift devices.

Layout.
Layout refers to the general arrangement and placement of units and components within a system.

Lines.
Lines refer to any single length of pipe, wire, or tubing.

Maintainability
Maintainability is that characteristic of design and installation which affects the amount of time and cost necessary to repair, test, calibrate, or adjust an item to a specified condition, when using defined procedures and resources.

Maintainability, design for.
This term refers to the preferred phasing or sequencing of maintainability design activities during system development. It is also used to refer to design considerations directed toward achieving those combined characteristics of equipment and facilities which will enable the accomplishment of necessary maintenance quickly, safely, accurately, and effectively with minimum requirements for personnel, skill, special tools and cost.

Maintenance.
Those actions by personnel which function to prevent or correct equipment failure e.g., inspecting, checking, troubleshooting, adjusting, replacing, repairing, and servicing activities.

Maintenance aids.
Maintenance aids refers to informational sources or tools such as procedures, manuals, instructions, flow diagrams, schematics, drawings and decision trees, and, eventually, expert systems, used by maintainers to perform their jobs.

Maintenance, corrective. Maintenance undertaken to rectify equipment failure or degradation of equipment after it has already occurred.

Maintenance information management system.
Refers to a system, typically at least in part computer based, for work scheduling, equipment/system status indicators related to maintenance, fault detection, status of consumables, and other aspects of coordinating maintenance operations used to perform these activities.

Maintenance support equipment.
Maintenance support equipment refers to apparatus which are used for handling, lifting, positioning, towing, fueling, lubricating, and repairing tasks in the performance of maintenance

Administrative Information Only

Modularization.
Modularization refers to unitized equipment in which the functional units making up a module are integrated and are removed as a unit.

Mounting
Mounting refers to a means of attaching and positioning components.

On-condition tasks.
On condition tasks refer to maintenance tasks undertaken when an inspection indicates that potential system or equipment failure is about to occur or is in the process of occurring (For example, replacing gears when particles in the gearbox oil show that gear failure is eminent).

Preventive maintenance.
Preventive maintenance refers to scheduled tasks taken prior to functional system or equipment failure (including unacceptable performance degradation) to ensure reliable operation.

Protective devices.
Protective devices are devices that reduce the consequence of system or equipment failure. Protective devices work by drawing attention to abnormal conditions (for example, alarms), shutting down failed equipment, eliminating or relieving abnormal conditions (for example, safety valves), taking over from a device that has failed (for example, redundant structural components), and by preventing dangerous situations from arising (for example, guards)

Restoration task.
Restoration tasks are maintenance tasks taken to restore an item to its initial low failure probability rate prior to the item age at which failure becomes substantially more likely, restoration being done regardless of the items condition at that time.

Service points.
Service points are accesses designed to provide a means for adjusting, lubricating, filling, changing, charging, and other service activities on equipment and components.

Software maintenance.
Software or program maintenance is defined as the process of modifying existing operational software to fix errors, to accommodate different operational environments such as new hardware or software platforms, to add new functions and/or improve program efficiency, or to anticipate future problems by making software easier to maintain or modify. It covers system life-cycle phases from change requirements analysis to implementation and documentation of program modification.

Task analysis.
An analytical technique used to determine the different requirement needed to perform a task successfully and efficiently; e.g., displays, controls, tools, environmental conditions, training, time, etc.

Test equipment, automatic.
Automatic test equipment runs two or more tests in sequence without the intervention of a technician. The automatic testing usually stops when the first out-of tolerance signal is detected.

Test equipment, built in.
Built in test equipment is an integral part of the equipment it is designed to test.

Administrative Information Only

Test equipment, go, no-go.
Go, no-go test equipment only tells whether a given signal or test result is in or out of tolerance.

Test points.
Test points are accesses designed to provide a means for conveniently and safely determining the operational status of equipment and isolating malfunctions.

Torque.
A turning or twisting force; for example, the amount of force required to turn a valve.

Unitization.
Unitization refers to separating equipment into physically and functionally distinct units to allow for easy removal and replacement.

Validation.
The operation of assuring that a procedure can actually be used to perform the designated maintenance tasks accurately and efficiently under the operational conditions of interest. The term may also be used for any operation to assure that some aspect of maintenance can be performed; for example, that a new system actually has the required maintainability.

Verification.
The operations of assuring that a procedure actually meets human factors design standards, e.g. it is technically accurate, uses commonly accepted terminology accurately, is formatted according to human factors standards, etc.

Zone banding.
Use of pattern or color coding to show a critical range(s) on a scale; for example, normal operating range or a danger zone which may lead to equipment malfunction.

Administrative Information Only

CONCLUDING MATERIAL

Review Activity:

DOE	**Field Offices**
DP	AL
EH	ID
EH	OR
NE	RL
SR	

National Laboratories

LANL

Area Offices

RL

Preparing Activity:

DOE-EH-52

Project Number:

HFAC-0012